1983 GPz

PARTS DIAGRAM

OWNER TOOLS

F2810-0145

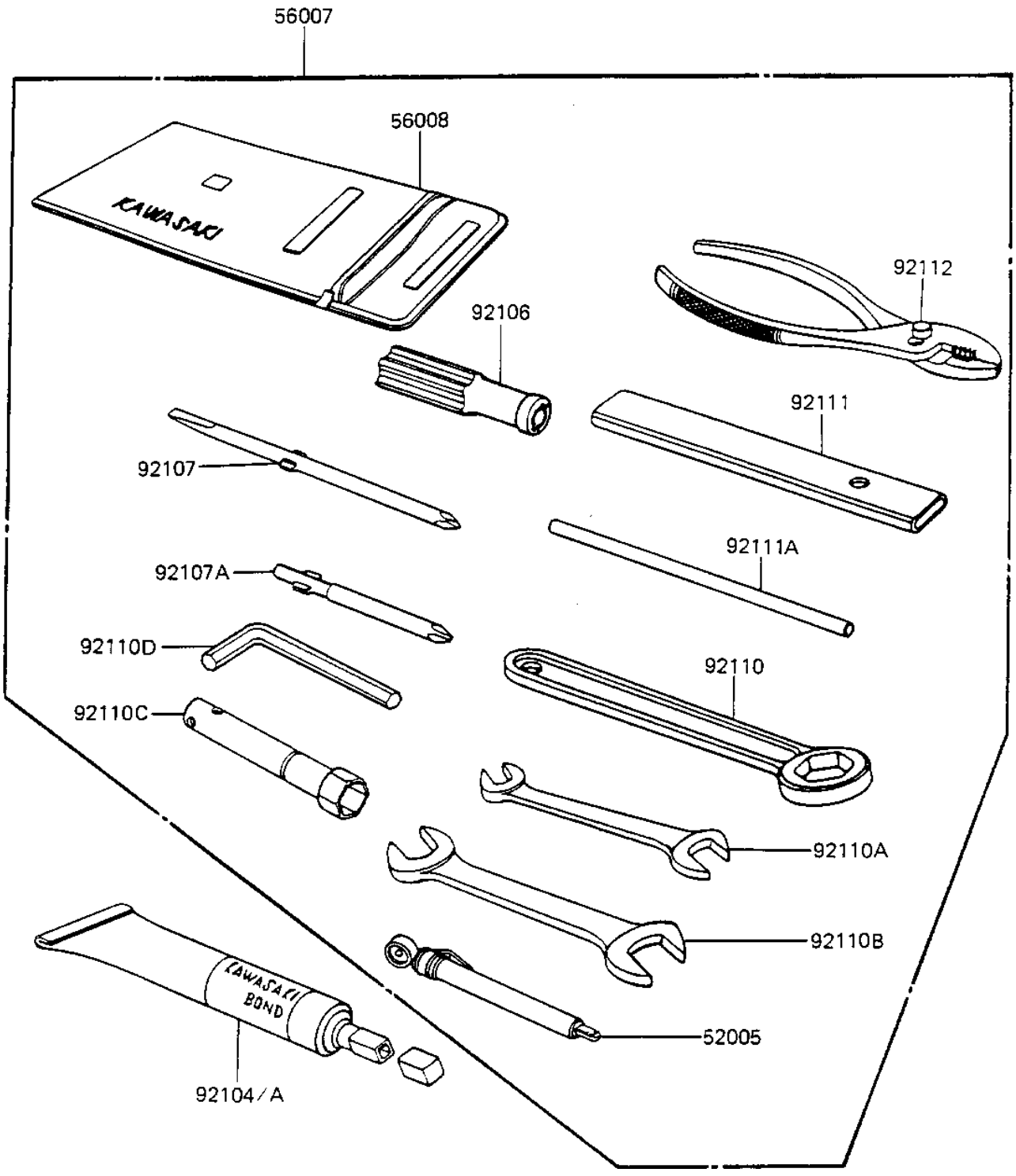

© 2026 Kawasaki Motors Corp., U.S.A.

1983 GPz

PARTS LIST

OWNER TOOLS

ITEM NAME	PART NUMBER	QUANTITY
GAUGE,AIR,3.5KG/CM2 (Ref # 52005)	52005-1031	1
56007-1217 (Canada) (Ref # 56007)	56007-1191	1
BAG,TOOL (Ref # 56008)	56008-006	1
LIQUID GASKET (Ref # 92104)	92104-002	1
GASKET-LIQUID,BLACK (Ref # 92104A)	92104-1003	1
GRIP,SCREW DRIVER (Ref # 92106)	92106-1001	1
TOOL-DRIVER (Ref # 92107)	92107-1052	1
TOOL-DRIVER,#3PHILLIP (Ref # 92107A)	92107-1002	1
TOOL-WRENCH,BOX END,2 (Ref # 92110)	92110-1147	1
TOOL-WRENCH,OPEN END (Ref # 92110A)	92110-1038	1
TOOL-WRENCH,OPEN END, (Ref # 92110B)	92110-1153	1
WRENCH,SPARK PLUG (Ref # 92110C)	92108-008	1
TOOL-WRENCH,ALLEN,8MM (Ref # 92110D)	92110-1108	1
TOOL-WRENCH,ALLEN,8MM (Ref # 92111)	92111-004	1
BAR,SPARK PLUG WRENCH (Ref # 92111A)	92111-005	1
PLIERS,160MM (Ref # 92112)	92112-003	1

© 2026 Kawasaki Motors Corp., U.S.A.