1983 GPz

PARTS DIAGRAM

HEADLIGHT (ZX1100-A1)

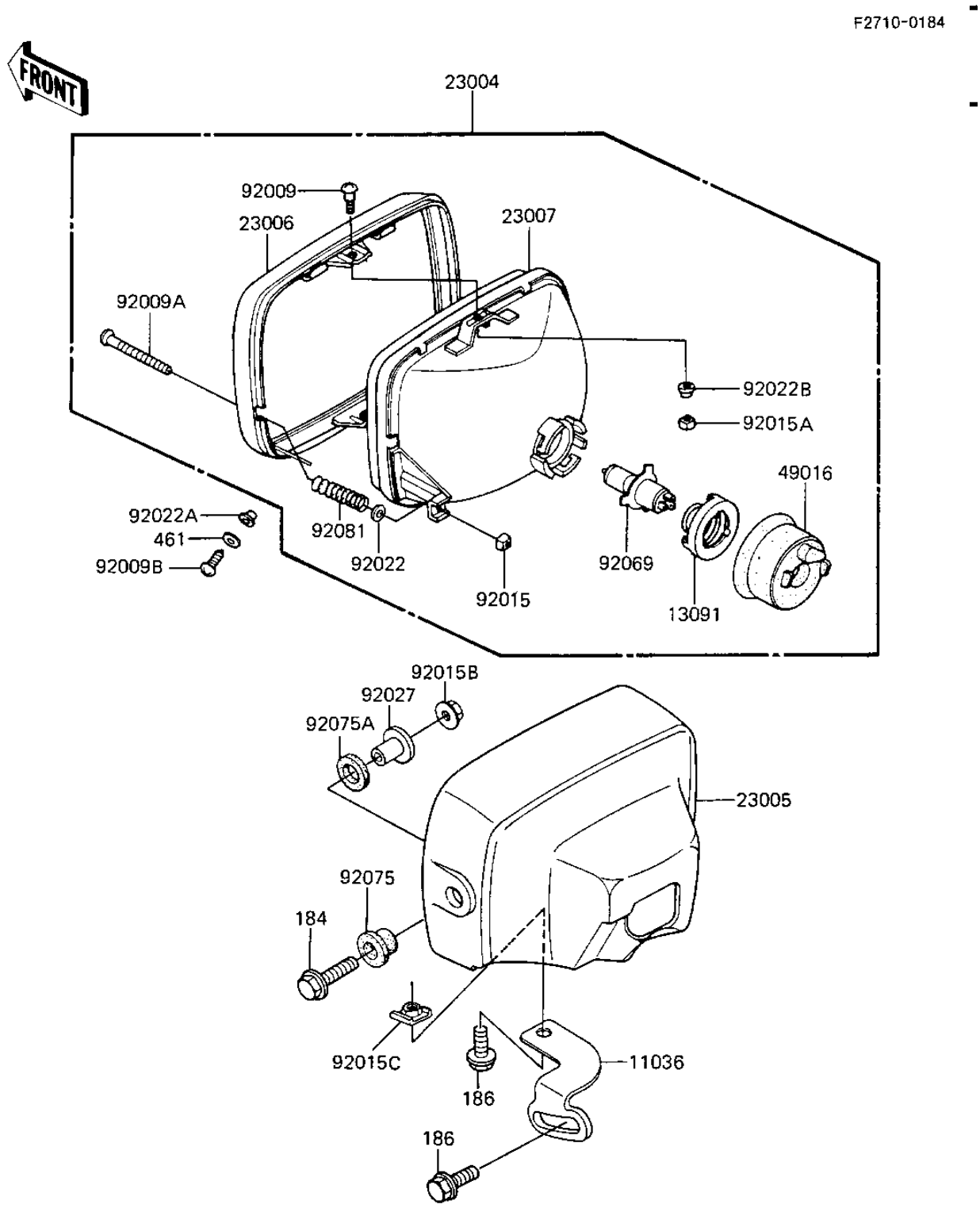

(ZX11C

© 2026 Kawasaki Motors Corp., U.S.A.

1983 GPz

PARTS LIST

HEADLIGHT (ZX1100-A1)

Kawasaki
Let the Good Times Roll®

ITEM NAME	PART NUMBER	QUANTITY
BRACKET-A,HEAD LAMP (Ref # 11036)	11036-1398	1
HOLDER,HEAD LAMP SOCK (Ref # 13091)	13091-1036	1
LAMP-HEAD (Ref # 23004)	23004-1116	1
BODY-COMP-HEAD LAMP (Ref # 23005)	23005-1022-6Z	1
RIM-LAMP,BLACK (Ref # 23006)	23006-1024	1
LENS-COMP (Ref # 23007)	23007-1041	1
COVER,HEAD LAMP SOCKE (Ref # 49016)	49016-1023	1
SCREW-PAN HEAD,5X12 (Ref # 92009)	23019-023	2
SCREW,HEAD LAMP LENS (Ref # 92009A)	92009-1047	1
SCREW-PAN HEAD,5MM (Ref # 92009B)	92011-024	2
NUT,4MM (Ref # 92015)	23020-018	1
NUT,HEAD LAMP RIM FIT (Ref # 92015A)	23020-023	2
NUT,8M/M (Ref # 92015B)	92015-1014	2
NUT,HEAD LAMP BODY FT (Ref # 92015C)	92015-1050	1
WASHER (Ref # 92022)	23021-004	1
WASHER (Ref # 92022A)	23021-010	2
WASHER-PLAIN,5MM (Ref # 92022B)	23021-012	2
COLLAR,HEAD LAMP FITT (Ref # 92027)	92027-1131	2
BULB,12V-60/55W (Ref # 92069)	92069-1002	1
DAMPER,HEAD LAMP FITT (Ref # 92075)	92075-1109	2
DAMPER,HEAD LAMP FITT (Ref # 92075A)	92075-1110	2
SPRING,HEAD LAMP LENS (Ref # 92081)	92081-1103	1
BOLT-UPSET-WP-SMALL (Ref # 184)	184C0835	2
BOLT (Ref # 186)	186B0614	2
WASHER SPRING 5MM (Ref # 461)	461F0500	2

© 2026 Kawasaki Motors Corp., U.S.A.