1994 Super Sport XI

PARTS DIAGRAM

Seat

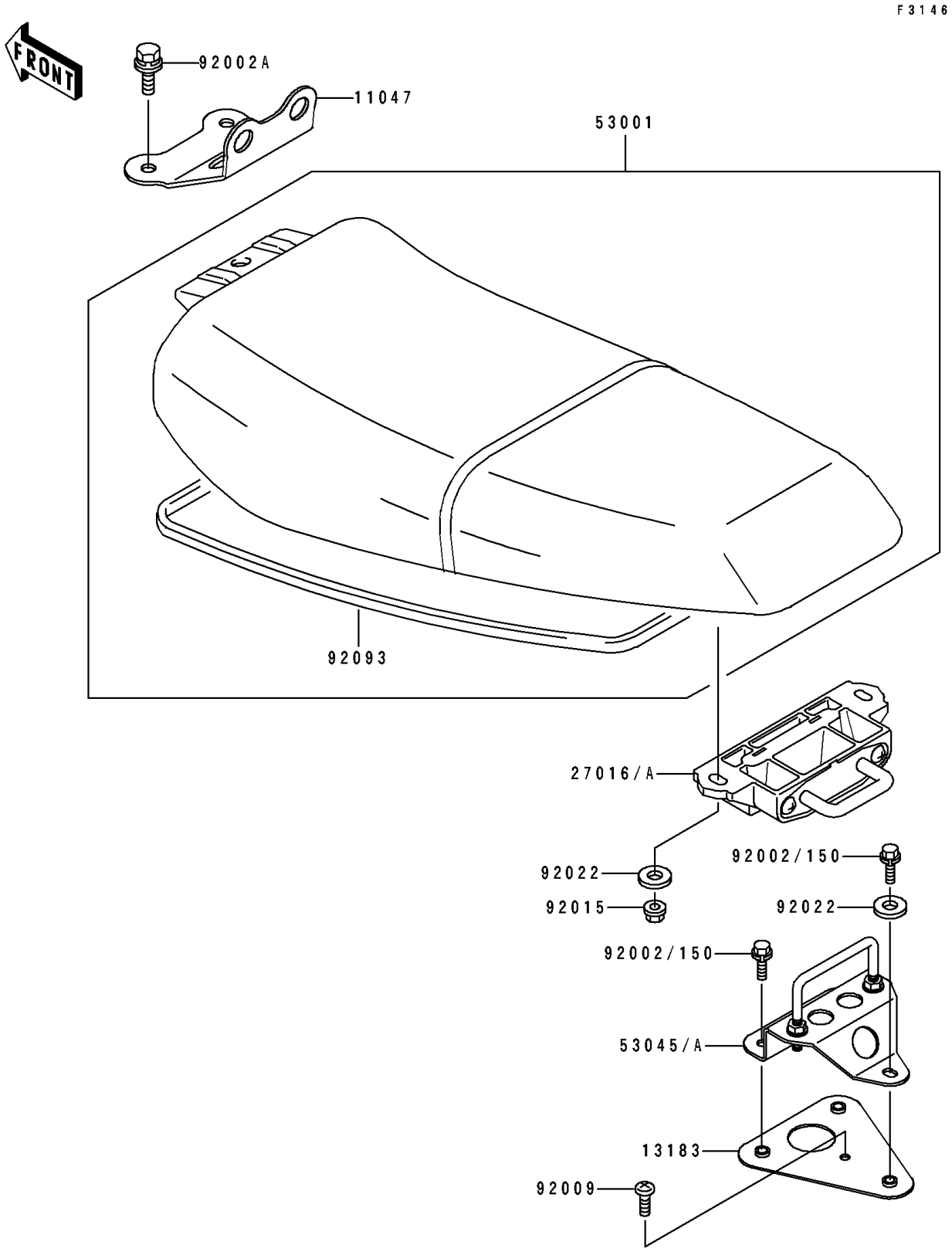

© 2026 Kawasaki Motors Corp., U.S.A.

1994 Super Sport XI

PARTS LIST

Seat

ITEM NAME	PART NUMBER	QUANTITY
BRACKET,SEAT,FR (Ref # 11047)	11047-3766	1
PLATE,SEAT LOCK HOOK (Ref # 13183)	13183-3820	1
LOCK-ASSY,SEAT (Ref # 27016A)	27016-3731	1
SEAT-ASSY,J.S.VIOLET (Ref # 53001)	53001-3718-PJ	1
HOOK-ASSY,SEAT LOCK (Ref # 53045A)	53045-3706	1
BOLT,6X16 (Ref # 92002)	92002-3728	3
BOLT,8X25 (Ref # 92002A)	92002-3774	2
SCREW,5X16 (Ref # 92009)	92009-3789	1
NUT,6MM (Ref # 92015)	92015-3767	2
WASHER,6.5X20X1.5 (Ref # 92022)	92022-3710	3
SEAL,SEAT (Ref # 92093)	92093-3735	1

© 2026 Kawasaki Motors Corp., U.S.A.