# 1983 Eddie Lawson Replica

## PARTS DIAGRAM

### VALVES

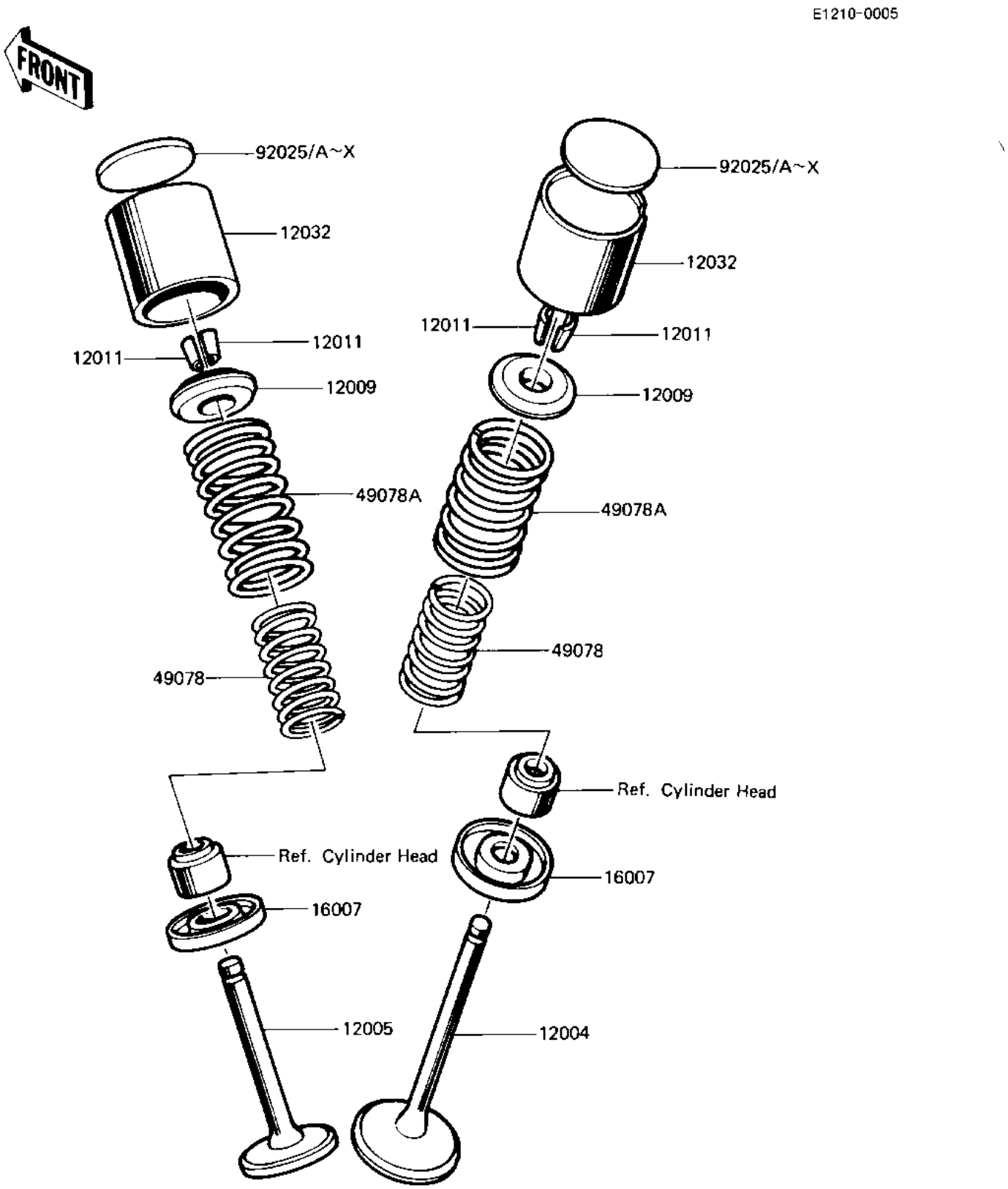


© 2026 Kawasaki Motors Corp., U.S.A.

# 1983 Eddie Lawson Replica

## PARTS LIST

### VALVES

| ITEM NAME | PART NUMBER | QUANTITY |
|---|---|---|
| VALVE INTAKE (Ref # 12004) | 12004-1013 | 4 |
| VALVE EXHAUST (Ref # 12005) | 12005-1011 | 4 |
| RETAINER,VALVE SPRING (Ref # 12009) | 12009-005 | 8 |
| SPLIT KEEPER (Ref # 12011) | 12011-004 | 16 |
| TAPPET (Ref # 12032) | 12032-1002 | 8 |
| SEAT-SPRING,VALVE (Ref # 16007) | 16007-1024 | 8 |
| SPRING,VALVE,INNER (Ref # 49078) | 49078-1001 | 8 |
| SPRING,VALVE,OUTER (Ref # 49078A) | 49078-1002 | 8 |
| SHIM,TAPPET,2.00T (Ref # 92025) | 12037-001 | AR |
| SHIM,TAPPET,2.05T (Ref # 92025A) | 12037-002 | AR |
| SHIM,TAPPET,2.10T (Ref # 92025B) | 12037-003 | AR |
| SHIM,TAPPET,2.15T (Ref # 92025C) | 12037-004 | AR |
| SHIM,TAPPET,2.20T (Ref # 92025D) | 12037-005 | AR |
| SHIM,TAPPET,2.25T (Ref # 92025E) | 12037-006 | AR |
| SHIM,TAPPET,2.30T (Ref # 92025F) | 12037-007 | AR |
| SHIM,TAPPET,2.35T (Ref # 92025G) | 12037-008 | AR |
| SHIM,TAPPET,2.40T (Ref # 92025H) | 12037-009 | AR |
| SHIM,TAPPET,2.45T (Ref # 92025I) | 12037-010 | AR |
| SHIM,TAPPET,2.50T (Ref # 92025J) | 12037-011 | AR |
| SHIM,TAPPET,2.55T (Ref # 92025K) | 12037-012 | AR |
| SHIM,TAPPET,2.60T (Ref # 92025L) | 12037-013 | AR |
| SHIM,TAPPET,2.65T (Ref # 92025M) | 12037-014 | AR |
| SHIM,TAPPET,2.70T (Ref # 92025N) | 12037-015 | AR |
| SHIM,TAPPET,2.75T (Ref # 92025O) | 12037-016 | AR |
| SHIM,TAPPET,2.80T (Ref # 92025P) | 12037-017 | AR |
| SHIM,TAPPET,2.85T (Ref # 92025Q) | 12037-018 | AR |
| SHIM,TAPPET,2.90T (Ref # 92025R) | 12037-019 | AR |
| SHIM,TAPPET,2.95T (Ref # 92025S) | 12037-020 | AR |
| SHIM,TAPPET,3.00T (Ref # 92025T) | 12037-021 | AR |

© 2026 Kawasaki Motors Corp., U.S.A.

# 1983 Eddie Lawson Replica

## PARTS LIST

## VALVES

| ITEM NAME | PART NUMBER | QUANTITY |
|---|---|---|
| SHIM,TAPPET,3.05T (Ref # 92025U) | 12037-022 | AR |
| SHIM,TAPPET,3.10T (Ref # 92025V) | 12037-023 | AR |
| SHIM,TAPPET,3.15T (Ref # 92025W) | 12037-024 | AR |
| SHIM,TAPPET 3.20T (Ref # 92025X) | 12037-025 | AR |

© 2026 Kawasaki Motors Corp., U.S.A.