1980 LTD

PARTS DIAGRAM

BRAKE PEDAL/TORQUE LINK ('80 A1)

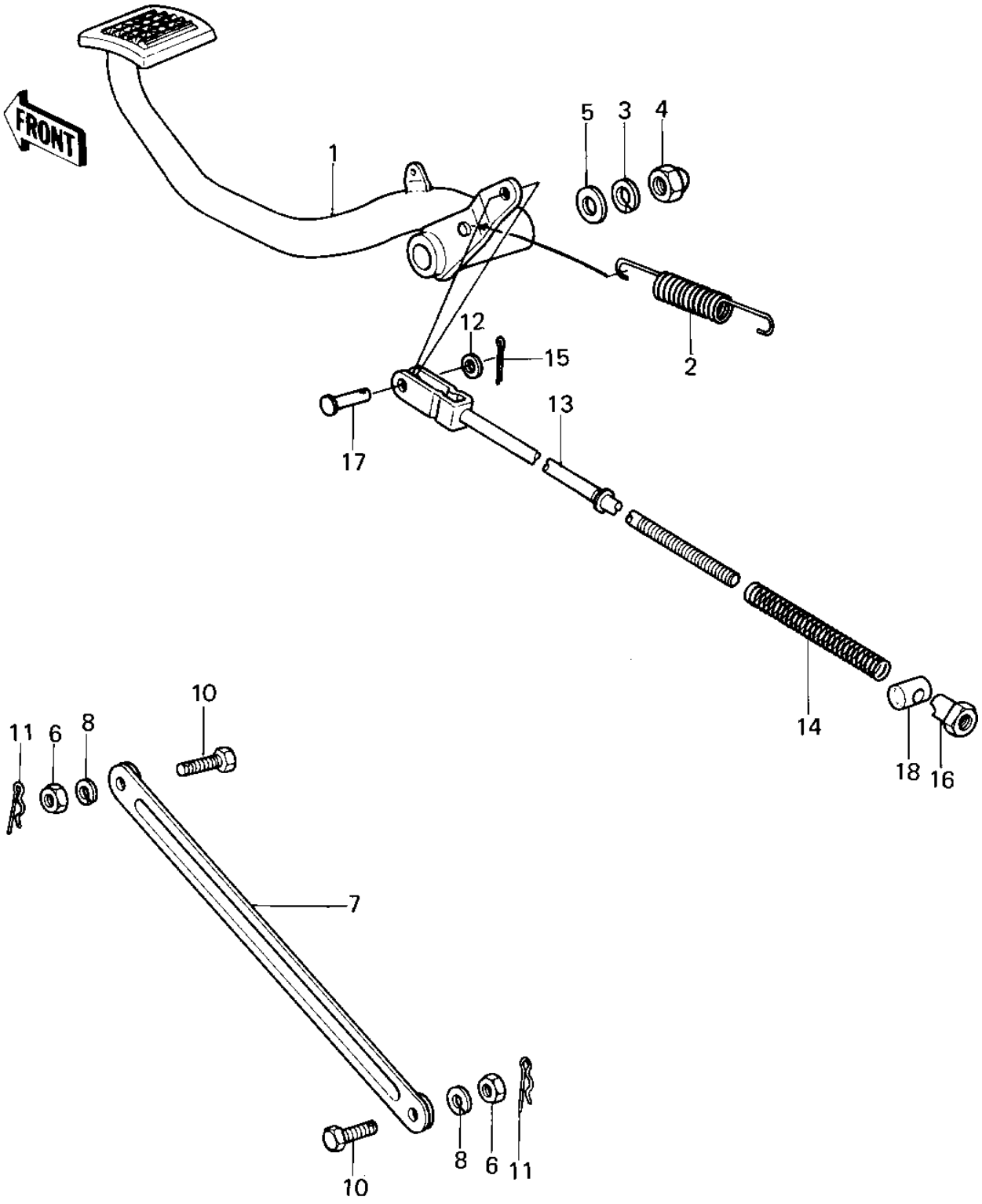

© 2026 Kawasaki Motors Corp., U.S.A.

1980 LTD

PARTS LIST

BRAKE PEDAL/TORQUE LINK ('80 A1)

ITEM NAME	PART NUMBER	QUANTITY
PEDAL,BRAKE (Ref # 1)	43001-1035	1
SPRING,BRAKE PEDAL (Ref # 2)	43005-029	1
WASHER SPRING 8MM (Ref # 3)	461F0800	1
NUT,CAP AND LOCK,8MM (Ref # 4)	92019-013	1
WASHER,8.5X20X1.6 (Ref # 5)	92022-1561	1
NUT 10MM (Ref # 6)	315B1000	2
TORQUE LINK REAR BRK (Ref # 7)	43007-016	1
WASHER SPRING 10MM (Ref # 8)	461F1000	2
BOLT TORQUE LINK FIT (Ref # 9)	92003-017	1
BOLT HEX HEAD 10MM (Ref # 10)	92003-034	1
PIN,SNAP (Ref # 11)	554A0800	2
WASHER PLAIN 6MM (Ref # 12)	410B0600	1
ROD-BRAKE (Ref # 13)	43011-009	1
SPRING,BRAKE ROD (Ref # 14)	43012-001	1
PIN COTTER 2.0X15 (Ref # 15)	550D2015	1
NUT-BRAKE ROD ADJUST (Ref # 16)	92015-042	1
PIN-BRAKE ROD FITTING (Ref # 17)	92043-064	1
PIN-BRAKE ROD (Ref # 18)	92043-065	1

© 2026 Kawasaki Motors Corp., U.S.A.