1983 LTD Belt

PARTS DIAGRAM

GEAR CHANGE MECHANISM ('81-'83 D2/D3/D4/

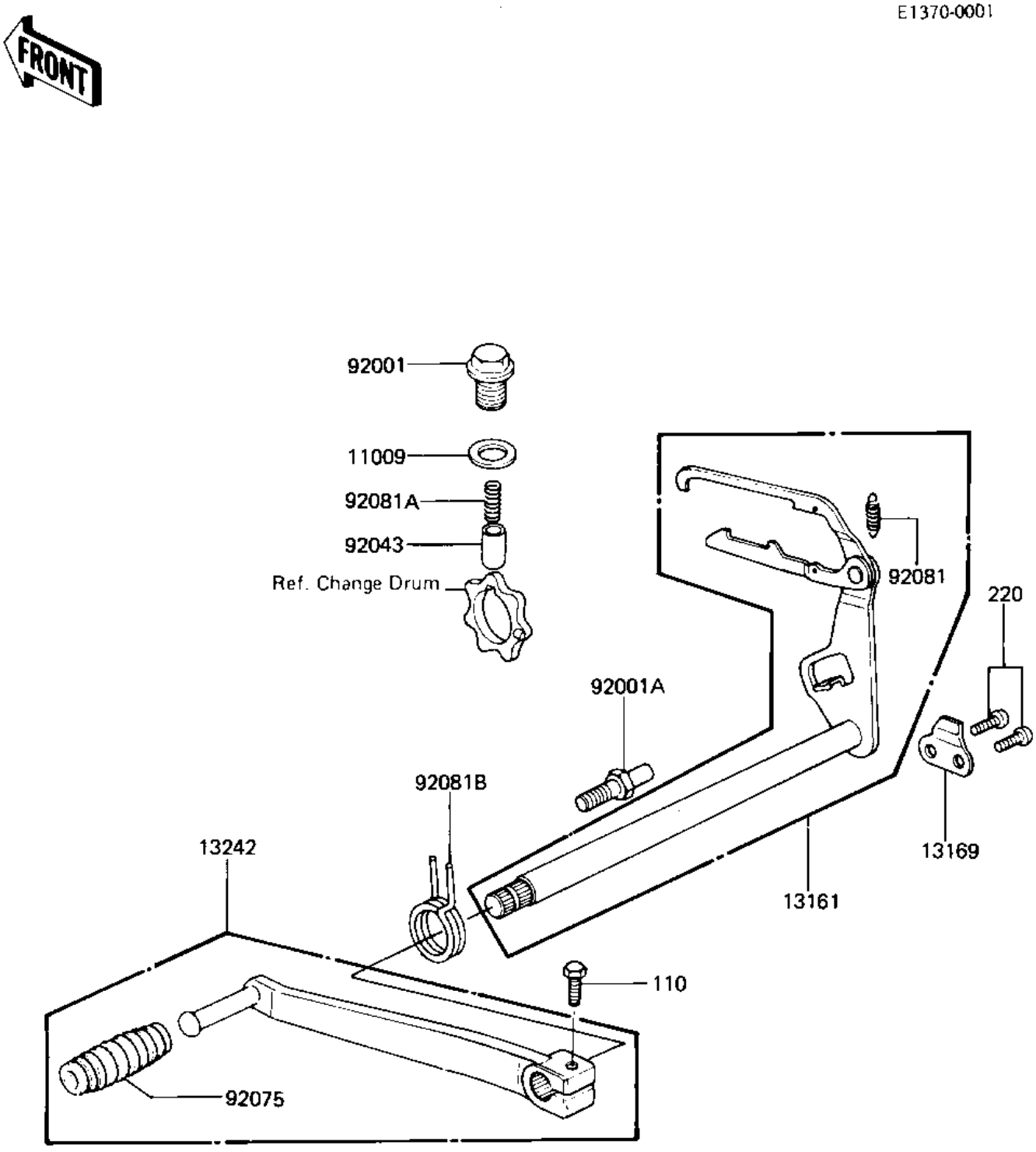

© 2026 Kawasaki Motors Corp., U.S.A.

1983 LTD Belt

PARTS LIST

GEAR CHANGE MECHANISM ('81-'83 D2/D3/D4/

ITEM NAME	PART NUMBER	QUANTITY
GASKET,15.5X22X1 (Ref # 11009)	11009-1008	1
LEVER COMP,CHNG SHAFT (Ref # 13161)	13161-1001	1
PLATE,GEAR SHIFT LEV (Ref # 13169)	13169-011	1
PEDAL ASSY,GEAR CHANG (Ref # 13242)	13242-1019	1
BOLT,NEUTRAL POSITION (Ref # 92001)	92001-1037	1
BOLT,RETURN SPRING (Ref # 92001A)	92001-1401	1
PIN-NEUTRAL POSITION (Ref # 92043)	92043-076	1
DAMPER,CHANGE PEDAL (Ref # 92075)	92160-1036	1
SPRING-CHANGE LEVER (Ref # 92081)	92081-076	1
SPRING (Ref # 92081A)	92081-112	1
SPRING,CHG PEDL RTRN (Ref # 92081B)	92083-028	1
BOLT-UPSET,6X20 (Ref # 110)	112G0620	1
SCREW PAN HEAD 6X16 (Ref # 220)	220B0616	2

© 2026 Kawasaki Motors Corp., U.S.A.