1983 LTD Belt

PARTS DIAGRAM

CYLINDER HEAD (KZ440-D2/D3/D4)

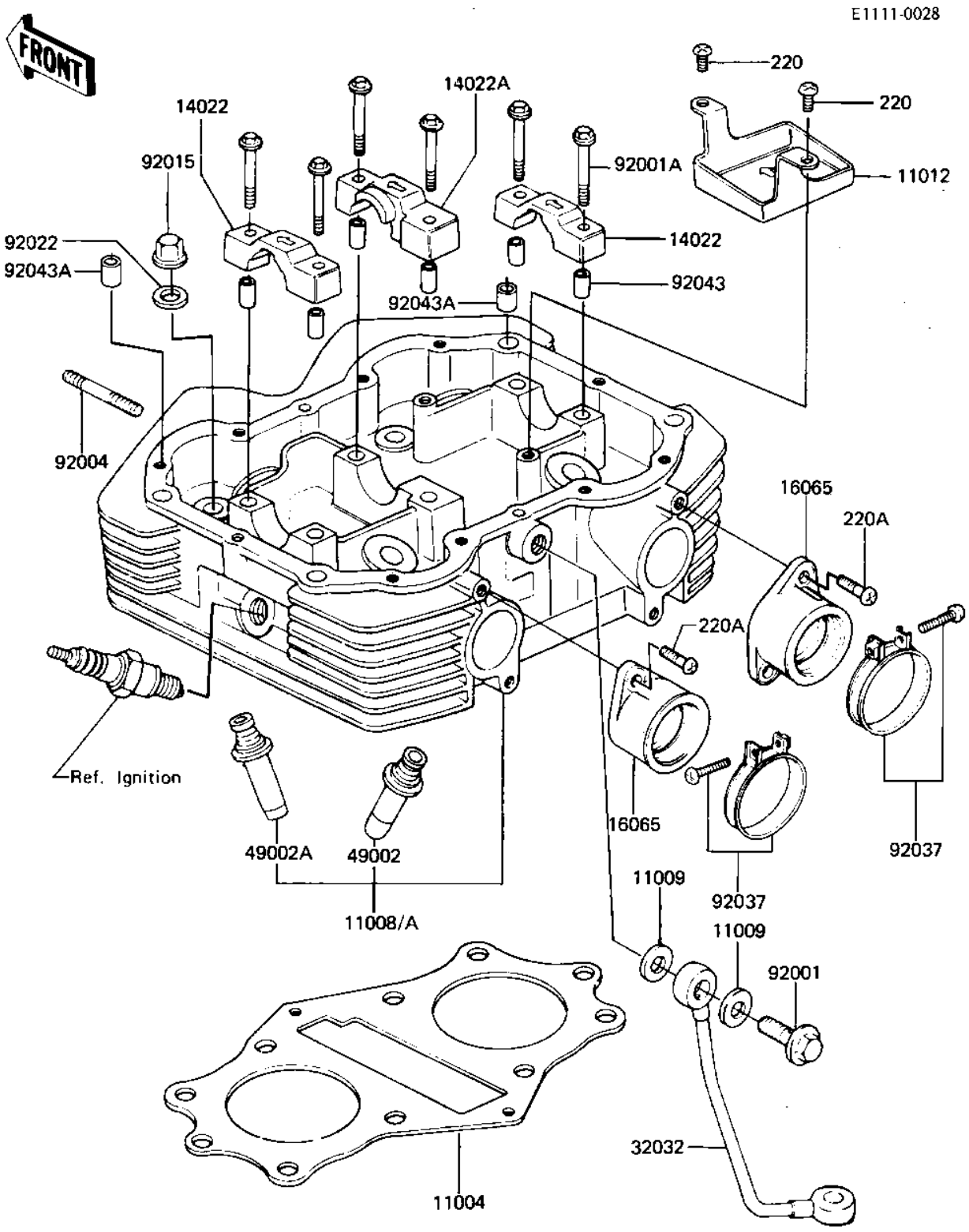

© 2026 Kawasaki Motors Corp., U.S.A.

1983 LTD Belt

PARTS LIST

CYLINDER HEAD (KZ440-D2/D3/D4)

ITEM NAME	PART NUMBER	QUANTITY
GASKET,CYLINDER HEAD (Ref # 11004)	11004-1020	1
HEAD-COMP-CYLINDER,SI (Ref # 11008)	11008-1034	1
GASKET,10X14.5X1.5 (Ref # 11009)	11009-1105	2
CAP,CYLINDER HEAD OIL (Ref # 11012)	11012-1027	1
CAP,BRG,HEAD,L.H&R.H (Ref # 14022)	14022-1002	2
CAP,BRG.HEAD,CENTER (Ref # 14022A)	14022-1003	1
HOLDER,CARBURETOR (Ref # 16065)	16065-1027	2
PIPE,OIL (Ref # 32032)	32032-1084	1
GUIDE,INLET VALVE (Ref # 49002)	12013-003	2
GUIDE,EXHAUST VALVE (Ref # 49002A)	49002-1010	2
BOLT,BANJO,10X25 (Ref # 92001)	92001-1017	1
BOLT,FLANGED,6X38 (Ref # 92001A)	92001-1105	6
STUD,6X46 (Ref # 92004)	92004-049	4
NUT,CYLINDER HEAD (Ref # 92015)	92015-076	8
WASHER,10.5X22X1.6 (Ref # 92022)	92022-1005	8
CLAMP,53M/M (Ref # 92037)	92037-201	2
PIN-DOWEL (Ref # 92043)	92042-007	6
PIN,DOWEL,10X8.2X14 (Ref # 92043A)	92043-1037	2
SCREW PAN HEAD 6X10 (Ref # 220)	220B0610	2
SCREW PAN HEAD 6X16 (Ref # 220A)	220B0616	4

© 2026 Kawasaki Motors Corp., U.S.A.