1981 KZ750-E2

PARTS DIAGRAM

AIR CLEANER ('81 -'82 KZ750-E2/E3)

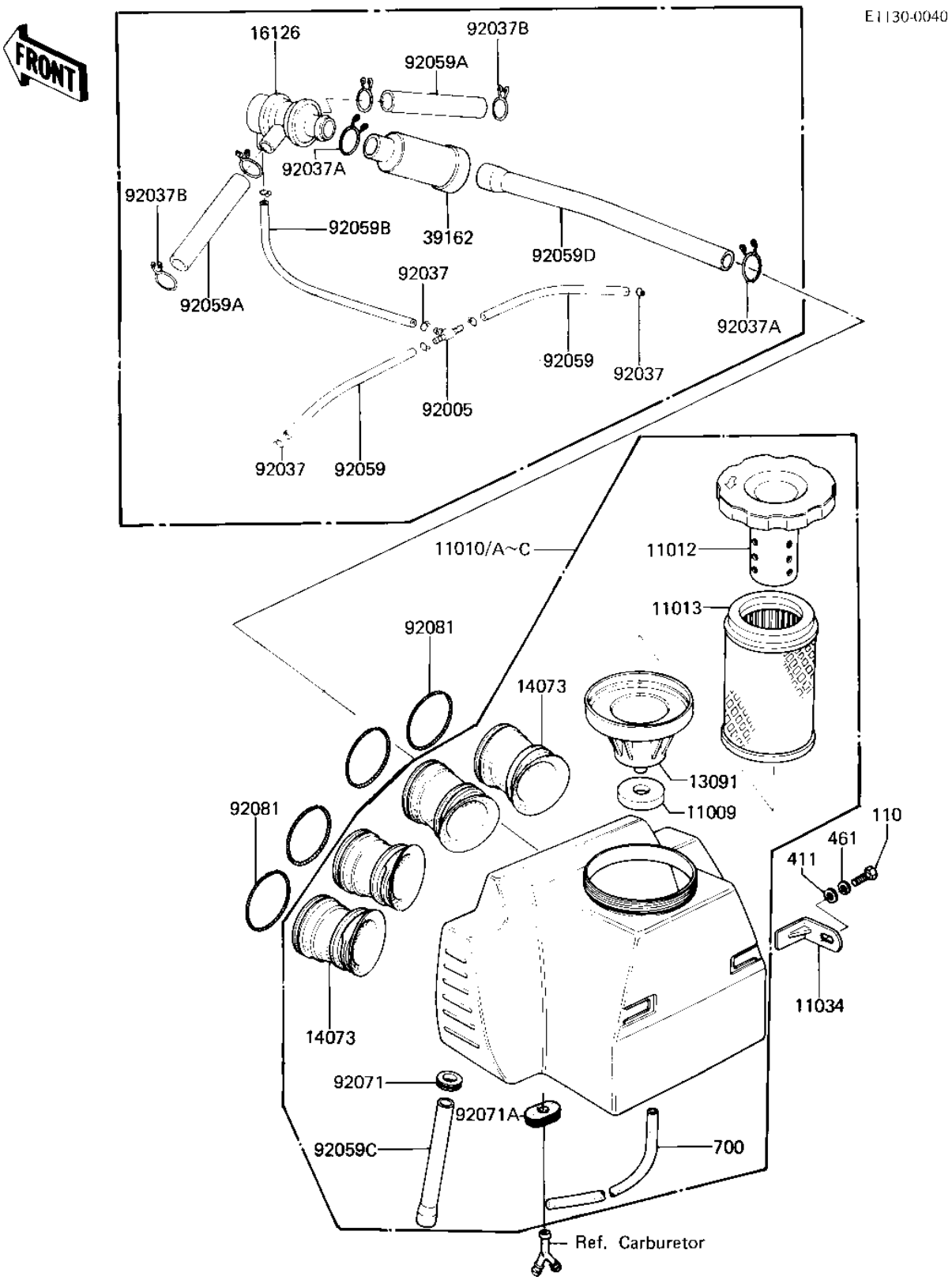

© 2026 Kawasaki Motors Corp., U.S.A.

1981 KZ750-E2

PARTS LIST

AIR CLEANER ('81 -'82 KZ750-E2/E3)

ITEM NAME	PART NUMBER	QUANTITY
GASKET,HOLDER (Ref # 11009)	11039-003	1
FILTER-ASSY-AIR (Ref # 11010)	11010-1090	1
FILTER-ASSY-AIR (Canada) (Ref # 11010A)	11010-1091	1
FILTER-ASSY-AIR (Ref # 11010B)	11010-1137	1
*** N.L.A.*** (Canada) (Ref # 11010C)	11010-1108	1
CAP,AIR CLEANER (Ref # 11012)	11012-069	1
ELEMENT,AIR CLNR (Ref # 11013)	11013-1025	1
BRACKET,AIR CLEANER (Ref # 11034)	32070-038	2
HOLDER,INLET PIPE (Ref # 13091)	11033-006	1
INLET DUCT (Ref # 14073)	14073-1032	4
VALVE ASSY,AIR SWITCH (Ref # 16126)	16126-1005	1
SILENCER (Ref # 39162)	39162-1003	1
FITTING,TUBE (Ref # 92005)	92005-1017	1
CLAMP-PIPE (Ref # 92037)	92037-072	6
CLAMP (Ref # 92037A)	92037-1076	2
CLAMP,BREATHER TUBE (Ref # 92037B)	92037-213	4
TUBE,VACUUM,LONG (Ref # 92059)	92059-1162	2
TUBE,14X20X100 (Ref # 92059A)	92059-1042	2
TUBE,4X9X290 (Ref # 92059B)	92059-1043	1
TUBE,11X26X135 (Ref # 92059C)	92059-1137	1
TUBE,14X20X290 (Ref # 92059D)	92059-1138	1
GROMMET (Ref # 92071)	92071-1027	1
GROMMET,AIR FILTER (Ref # 92071A)	92071-1034	2
SPRING (Ref # 92081)	92081-1177	4
BOLT-UPSET,6X12 (Ref # 110)	112G0612	2
WASHER PLAIN 6MM (Ref # 411)	411B0600	2
WASHER SPRING 6MM (Ref # 461)	461F0600	2
TUBE,VINYL,6X200 (Ref # 700)	700Q06200	1

© 2026 Kawasaki Motors Corp., U.S.A.