1981 KZ750-E2

PARTS DIAGRAM

ENGINE COVERS ('81 -'82 KZ750-E2/E3)

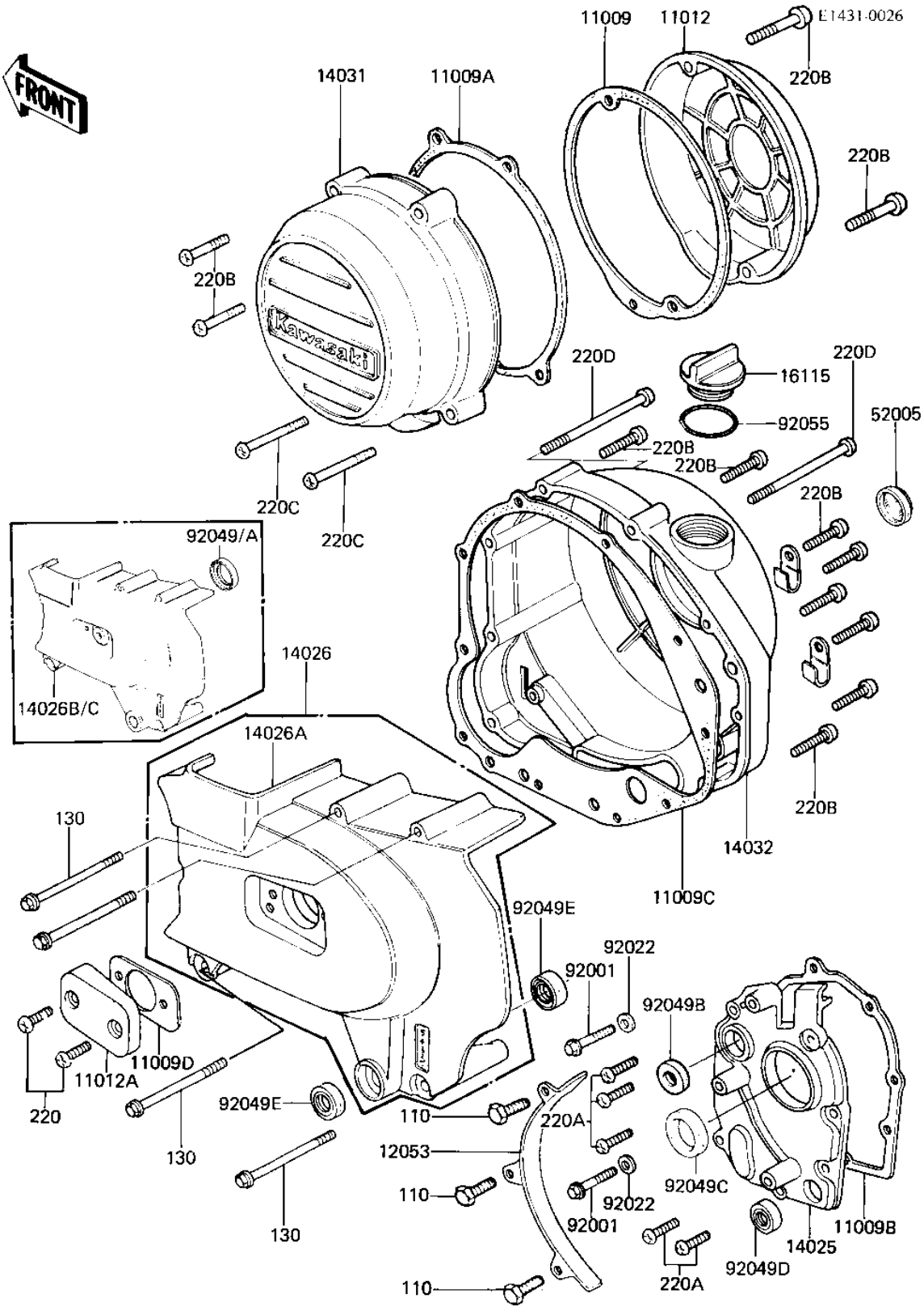

© 2026 Kawasaki Motors Corp., U.S.A.

1981 KZ750-E2

PARTS LIST

ENGINE COVERS ('81 -'82 KZ750-E2/E3)

ITEM NAME	PART NUMBER	QUANTITY
GASKET,PULSING COIL C (Ref # 11009)	11060-1053	1
GASKET,GENERATOR COVE (Ref # 11009A)	11009-1987	1
GASKET,TRANSMISSION C (Ref # 11009B)	11060-1056	1
GASKET,R.H.ENG COVER (Ref # 11009C)	14046-035	1
GASKET,CLUTCH ADJ CAP (Ref # 11009D)	14049-004	1
CAP,CONTACT BREAKER (Ref # 11012)	11012-1098	1
COVER,CLUTCH ADJUSTNG (Ref # 11012A)	14028-006-80	1
GUIDE,CHAIN (Ref # 12053)	12053-1006	1
COVER,MISSION (Ref # 14025)	14024-011	1
COVER,ENG SPROCKT,BUF (Ref # 14026A)	14026-035-80	1
COVER-CHAIN (Ref # 14026C)	14026-1053	1
COVER,GENERATOR (Ref # 14031)	14031-1040	1
COVER,CLUTCH F.BLACK (Ref # 14032)	14032-1026	1
PLUG,OIL FILLER (Ref # 16115)	16115-013	1
GAUGE,OIL LEVEL (Ref # 52005)	52005-1009	1
BOLT,HEX HEAD,6X35 (Ref # 92001)	92001-164	2
WASHER OIL PUMP BANJO (Ref # 92022)	92022-077	2
OIL SEAL,CLUTCH RELES (Ref # 92049A)	92049-1003	1
OIL SEAL,SD-8187 (Ref # 92049B)	92049-1017	1
OIL SEAL SC325210 (Ref # 92049C)	92050-024	1
OIL SEAL,TB13225.5 (Ref # 92049D)	92051-005	1
OIL SEAL,TB13225.5 (Ref # 92048E)	92051-005	2
"0" RING,31MM (Ref # 92055)	92055-049	1
BOLT-UPSET 6X14 (Ref # 110)	112B0614	3
BOLT-FLANGED,6X70 (Ref # 130)	130G0670	4
SCREW PAN HEAD 6X18 (Ref # 220)	220B0618	2
SCREW PAN HEAD 6X20 (Ref # 220A)	220B0620	5
SCREW PAN HEAD 6X30 (Ref # 220B)	220B0630	12
SCREW PAN HEAD 6X40 (Ref # 220C)	220B0640	2

© 2026 Kawasaki Motors Corp., U.S.A.