1981 KZ750-E2

PARTS DIAGRAM

CAMSHAFTS/CHAIN/TENSIONER ('81 -'82 KZ75

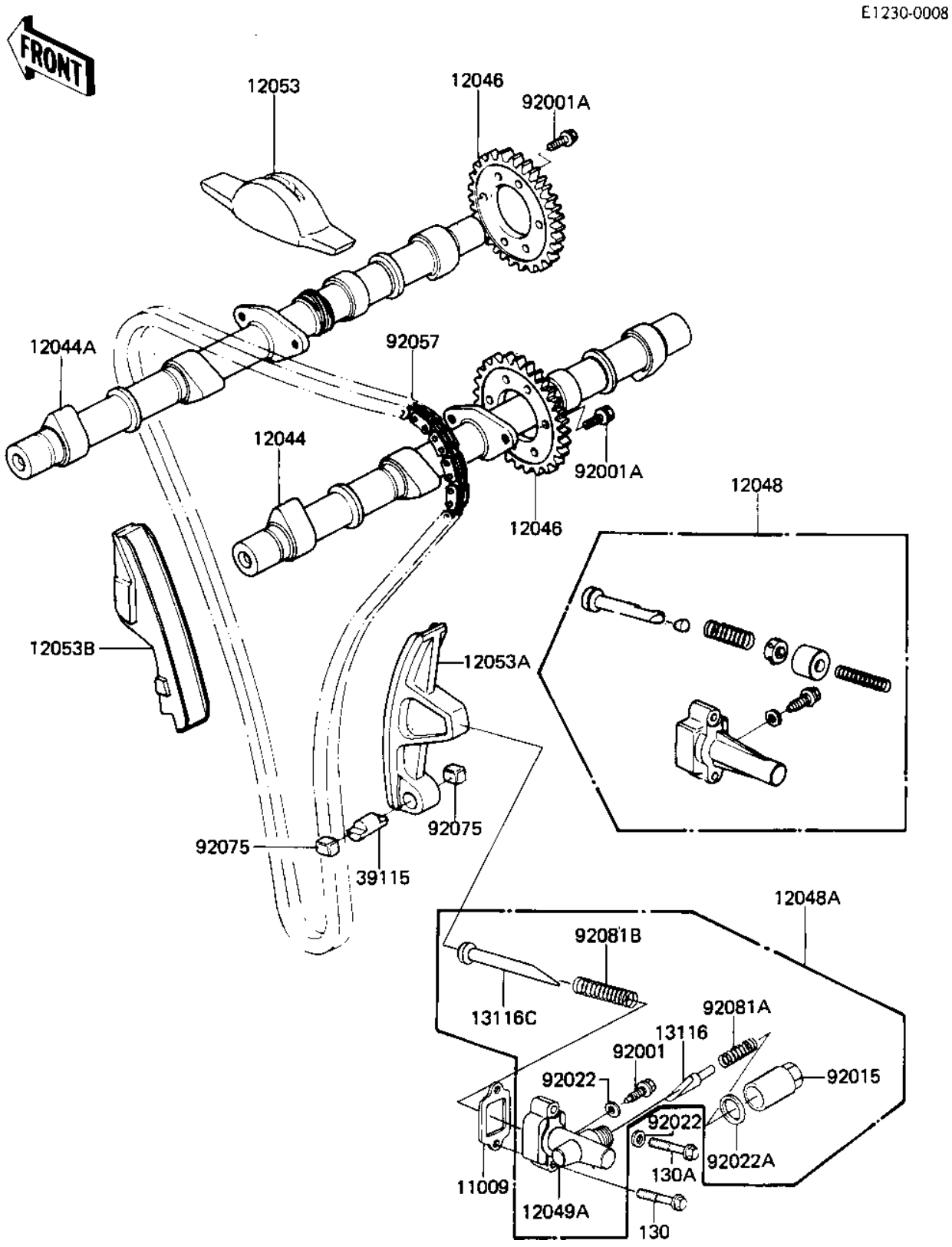

© 2026 Kawasaki Motors Corp., U.S.A.

1981 KZ750-E2

PARTS LIST

CAMSHAFTS/CHAIN/TENSIONER ('81 -'82 KZ75

ITEM NAME	PART NUMBER	QUANTITY
GASKET,TENSIONER (Ref # 11009)	11009-1980	1
CAMSHAFT-VALVE,INTAKE (Ref # 12044)	12044-1043	1
CAMSHAFT,EXHAUST (Ref # 12044A)	12044-1019	1
SPROCKET,CAMSHAFT 46T (Ref # 12046)	12046-1021	2
TENSIONER KIT (Ref # 12048A)	99996-1021	1
TENSIONER,CAM CHAIN (Ref # 12049A)	12049-1015	1
GUIDE,CHAIN UPPER (Ref # 12053)	12053-1038	1
GUIDE-CHAIN REAR (Ref # 12053A)	12053-1054	1
GUIDE-CHAIN,FR (Ref # 12053B)	12053-1058	1
ROD,PUSH,CAM CHAIN (Ref # 13116)	13116-1012	1
ROD-PUSH,TENSIONER (Ref # 13116C)	13116-1036	1
SHAFT,CAM CHAIN GUIDE (Ref # 39115)	12052-003	1
BELT,TENSIONER ADJUST (Ref # 92001)	92001-1155	1
BOLT,SPROCKET FITTING (Ref # 92001A)	92003-208	4
CAP,TENSIONER,18M/M (Ref # 92015)	92015-1100	1
WASHER OIL PUMP BANJO (Ref # 92022)	92022-077	2
WASHER,18.3X24X1.4T (Ref # 92022A)	92022-1175	1
CHAIN,CAM,82RH2015-15 (Ref # 92057)	92057-1319	1
DAMPER,CAM CHAIN GUID (Ref # 92075)	92075-1314	2
SPRING,TENSIONER (Ref # 92081A)	92081-1302	1
SPRING,TENSIONER (Ref # 92081B)	92081-1374	1
BOLT,FLANGED,6X30 (Ref # 130)	130G0630	1
BOLT,FLANGED,6X35 (Ref # 130A)	130H0635	1

© 2026 Kawasaki Motors Corp., U.S.A.