1980 LTD

PARTS DIAGRAM

GEAR CHANGE MECHANISM ('80 H1)

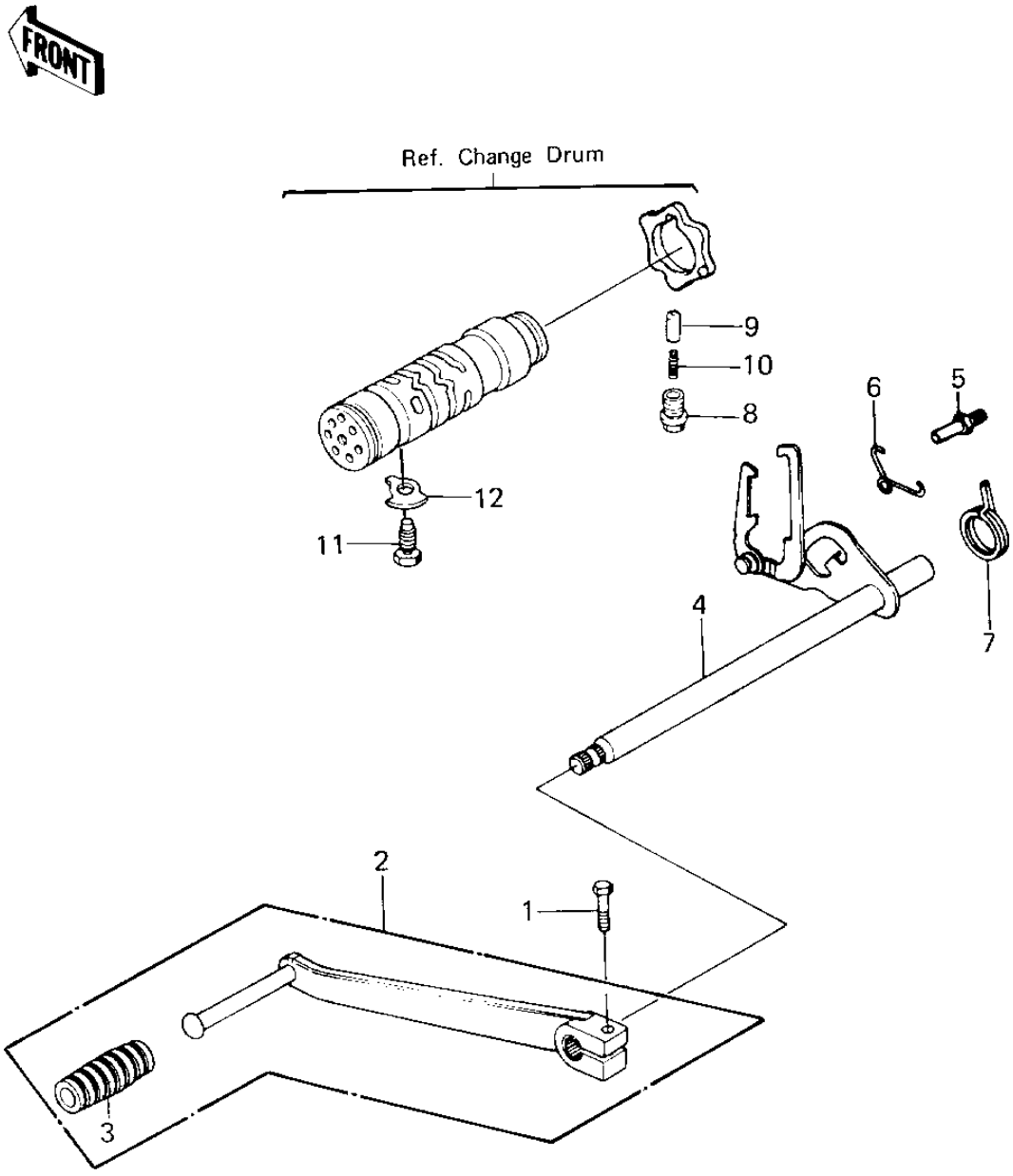

I

© 2026 Kawasaki Motors Corp., U.S.A.

1980 LTD

PARTS LIST

GEAR CHANGE MECHANISM ('80 H1)

ITEM NAME	PART NUMBER	QUANTITY
BOLT-UPSET,6X20 (Ref # 1)	112G0620	1
PEDAL ASSY,CHANGE (Ref # 2)	13242-1031	1
DAMPER,CHANGE PEDAL (Ref # 3)	92160-1036	1
LEVER ASSY,GEAR SFT (Ref # 4)	13161-042	1
BOLT,RETURN SPRING (Ref # 5)	92001-1401	1
SPRING,KICK PAWL (Ref # 6)	92083-018	1
SPRING,CHG PEDL RTRN (Ref # 7)	92083-028	1
BOLT,NEUTRAL POSITION (Ref # 8)	92001-1037	1
PIN-NEUTRAL POSITION (Ref # 9)	92043-076	1
SPRING (Ref # 10)	92081-112	1
BOLT,HEX HEAD,10X26 (Ref # 11)	92001-174	1
WASHER,LOCK,10MM (Ref # 12)	92024-074	1

© 2026 Kawasaki Motors Corp., U.S.A.