2000 Ultra 150

PARTS DIAGRAM

Flame Arrester

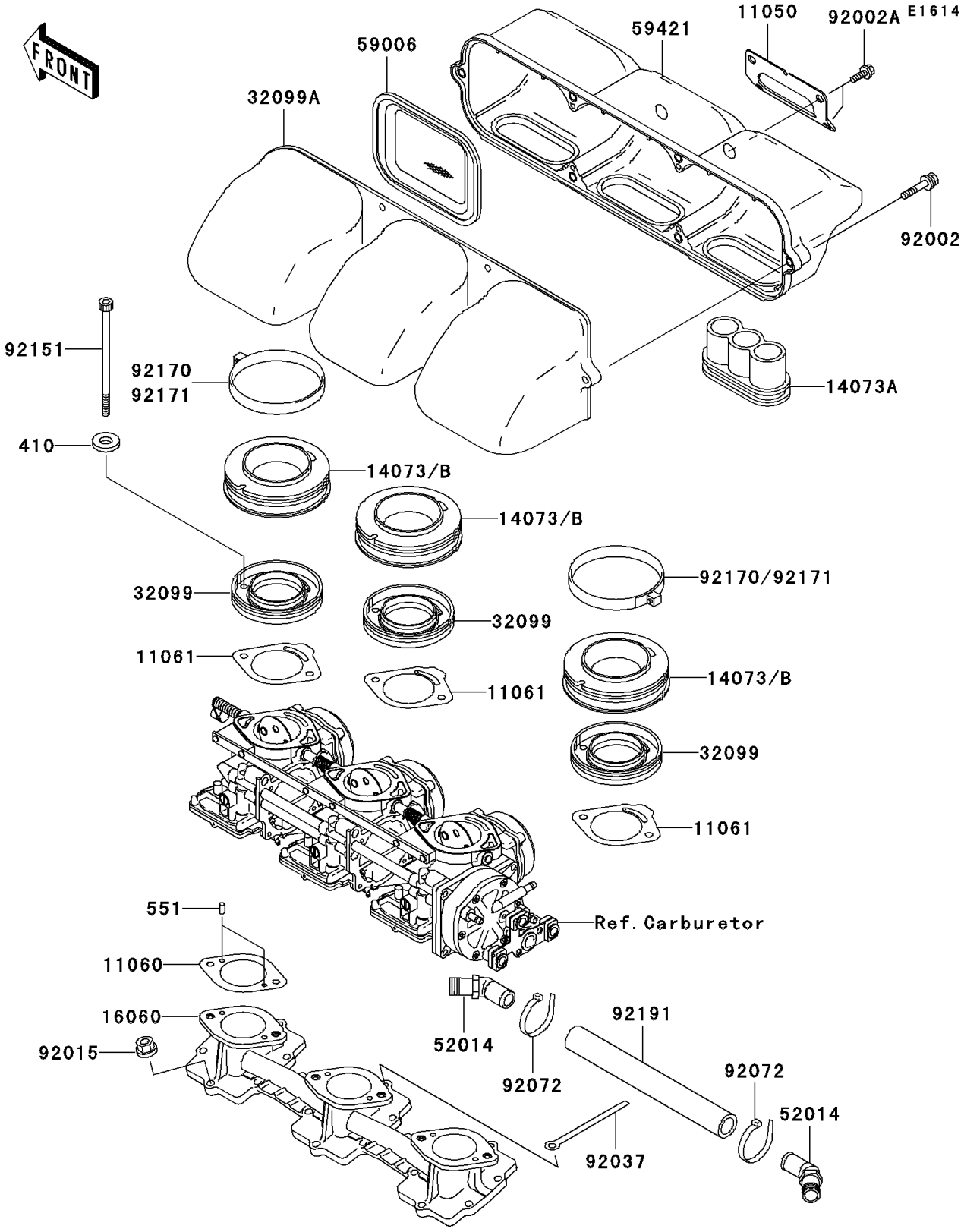

© 2026 Kawasaki Motors Corp., U.S.A.

2000 Ultra 150

PARTS LIST

Flame Arrester

ITEM NAME	PART NUMBER	QUANTITY
WASHER-PLAIN-SMALL,6MM (Ref # 410)	410S0600	6
PIN-DOWEL (Ref # 551)	551R0408	6
BRACKET (Ref # 11050)	11050-3754	1
GASKET (Ref # 11060)	11060-3788	3
DUCT (Ref # 14073)	14073-3766	3
DUCT (Ref # 14073A)	14073-3776	3
PIPE-INTAKE (Ref # 16060)	16060-3708	1
CASE (Ref # 32099)	32099-3831	3
CASE,ARRESTER (Ref # 32099A)	32099-3843	1
ELBOW (Ref # 52014)	52014-3714	2
ARRESTER-FLAME (Ref # 59006)	59006-3715	3
COVER-INTAKE (Ref # 59421)	59421-3728	1
BOLT,6X35 (Ref # 92002)	92002-3715	6
BOLT,6X16 (Ref # 92002A)	92002-3728	4
NUT,6MM (Ref # 92015)	92015-3767	18
CLAMP,L=100 (Ref # 92037)	92037-3736	1
BAND (Ref # 92072)	92072-3848	2
BOLT,SOCKET,6X120 (Ref # 92151)	92151-3732	6
CLAMP (Ref # 92170)	92170-3763	2
TUBE,16.5X24.5X203 (Ref # 92191)	92191-3837	1

© 2026 Kawasaki Motors Corp., U.S.A.