1999 Ultra 150

PARTS DIAGRAM

Carburetor

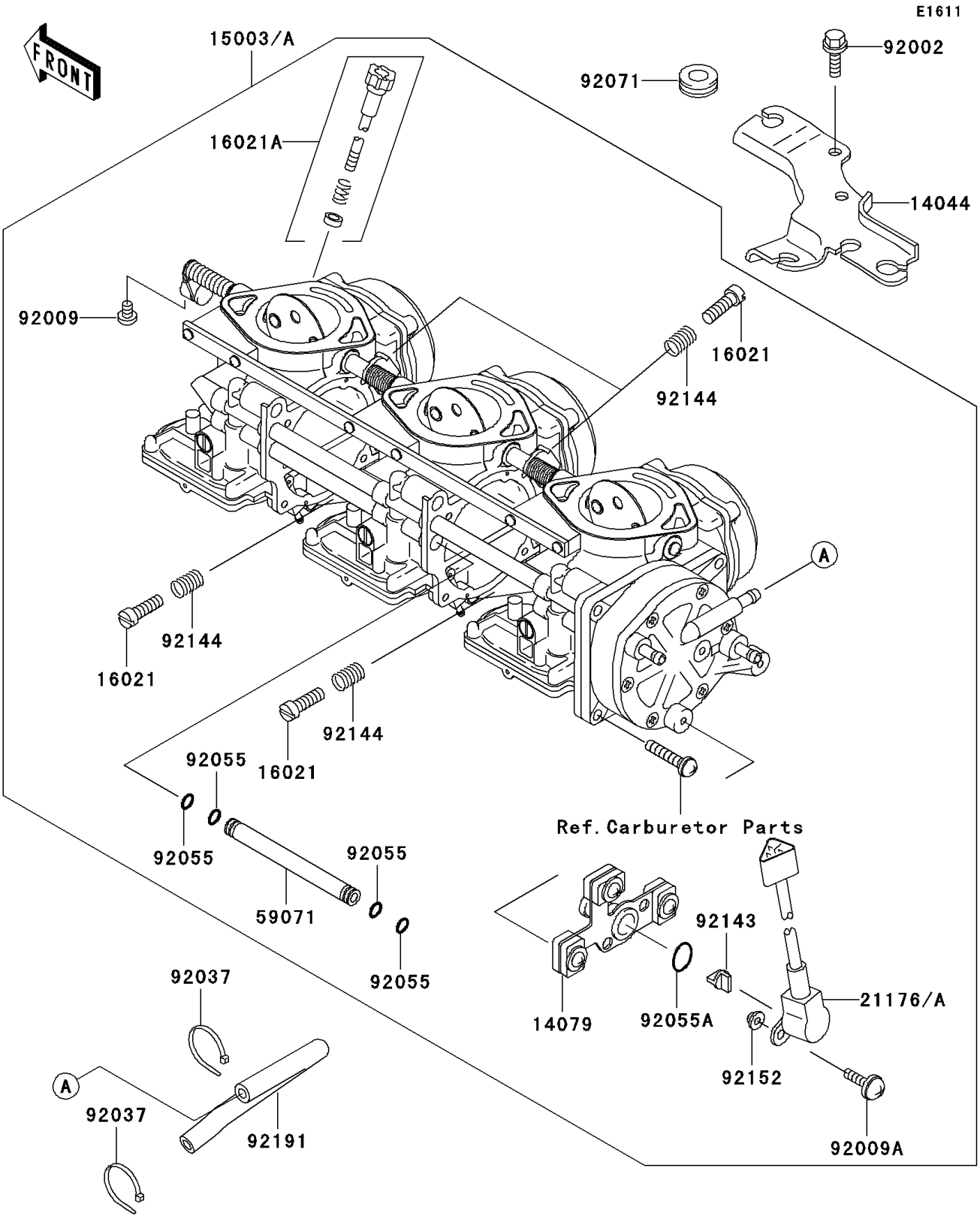

© 2026 Kawasaki Motors Corp., U.S.A.

1999 Ultra 150

PARTS LIST

Carburetor

ITEM NAME	PART NUMBER	QUANTITY
HOLDER-CABLE (Ref # 14044)	14044-3734	1
HOLDER-ASSY,SENSOR (Ref # 14079)	14079-3722	1
CARBURETOR-ASSY (Ref # 15003)	15003-3729	1
SCREW-THROTTLE STOP (Ref # 16021)	16021-3704	4
SCREW-THROTTLE STOP (Ref # 16021A)	16021-3709	1
SENSOR (Ref # 21176)	21176-3737	1
JOINT (Ref # 59071)	59071-3766	4
BOLT,6X16 (Ref # 92002)	92002-3728	2
SCREW,4X6 (Ref # 92009)	92009-3786	1
SCREW,SENSOR (Ref # 92009A)	92009-3863	2
CLAMP (Ref # 92037)	92037-1173	2
RING-O (Ref # 92055)	92055-1246	16
RING-O,SENSOR (Ref # 92055A)	92055-1574	1
GROMMET (Ref # 92071)	92071-1152	1
COLLAR (Ref # 92143)	92143-1907	1
SPRING,THROTTLE STOP SCREW (Ref # 92144)	92144-3745	4
COLLAR,SENSOR (Ref # 92152)	92152-3721	2
TUBE,PULSE (Ref # 92191)	92191-3838	1

© 2026 Kawasaki Motors Corp., U.S.A.