1982 Police 1000

PARTS DIAGRAM

TAILLIGHT

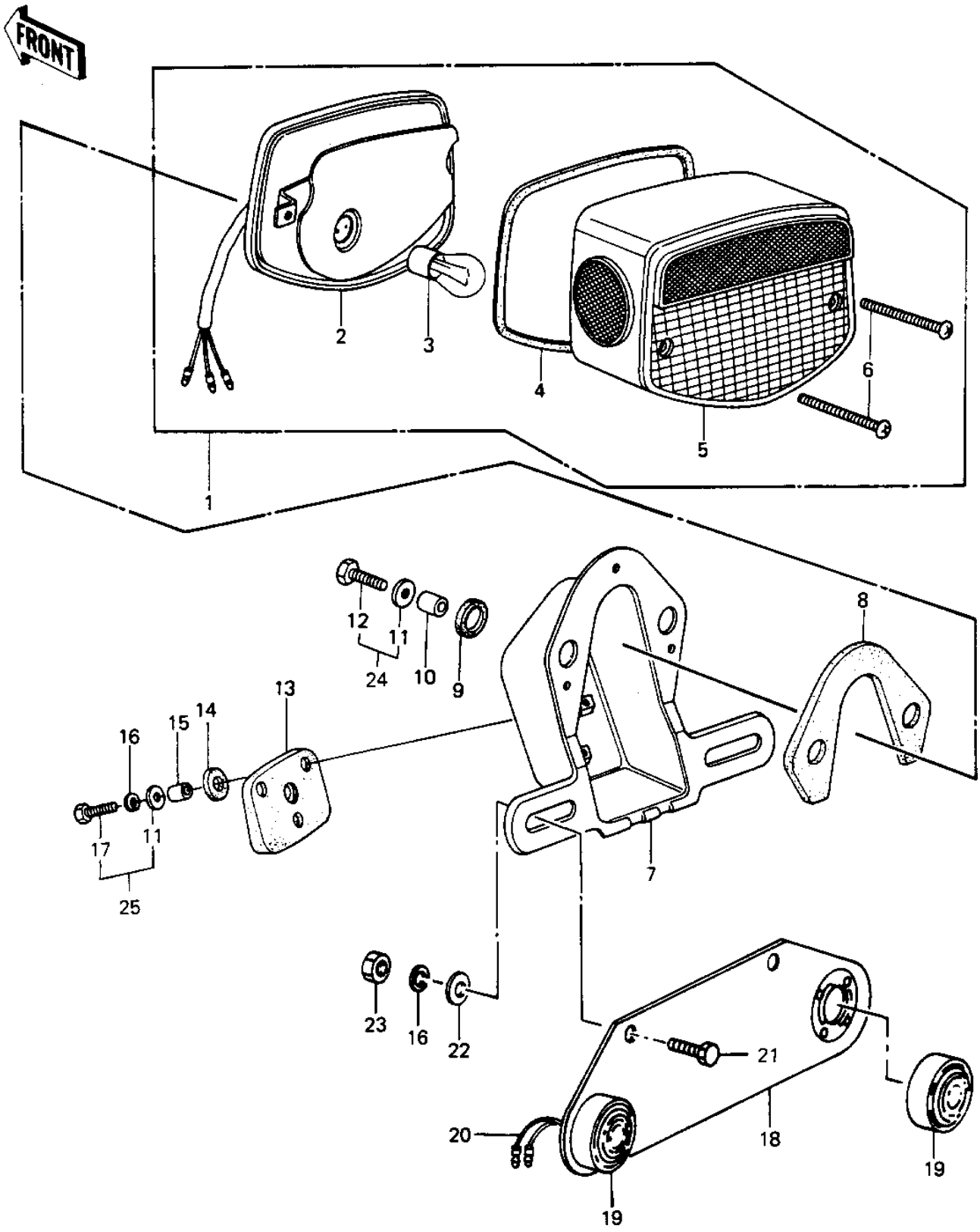

© 2026 Kawasaki Motors Corp., U.S.A.

1982 Police 1000

PARTS LIST

TAILLIGHT

ITEM NAME	PART NUMBER	QUANTITY
TAIL LAMP UNIT (Ref # 1)	23025-064	1
CASE,TAIL LIGHT (Ref # 2)	23027-041	1
BULB,12V 32/3CP (Ref # 3)	92069-059	1
GASKET,TAIL LENS (Ref # 4)	23028-021	1
LENS,TAIL LAMP (Ref # 5)	23026-034	1
SCREW-PAN-CROS (Ref # 6)	220B0460	2
BRACKET,LICENCE PLATE (Ref # 7)	23036-052	1
DAMPER RUBBER (Ref # 8)	23066-023	1
DAMPER RUBBER (Ref # 9)	23066-020	2
COLLAR,6.8X10X8.5 (Ref # 10)	92027-129	2
WASHER 6.5X20X1.6T (Ref # 11)	92022-125	5
BOLT 6X22 (Ref # 12)	112B0622	2
DAMPER RUBBER,RR FEND (Ref # 13)	35039-004	1
DAMPER RUBBER,RR FEND (Ref # 14)	92075-121	3
COLLAR 6.8X10X14.5 (Ref # 15)	92027-156	3
WASHER SPRING 6MM (Ref # 16)	461F0600	5
BOLT-UPSET (Ref # 17)	112G0625	3
BRACKET,LICENSE PLATE (Ref # 18)	23062-1002	1
TAIL LIGHT,ID, BLUE (Ref # 19)	23065-003	2
TAIL LIGHT,ID, RED (Ref # 19)	23065-004	(2
TAIL LIGHT,ID, AMBER (Ref # 19)	23065-005	(2
WIRE,CONNECT ID LITE (Ref # 20)	26001-4001	2
BOLT-UPSET,6X20 (Ref # 21)	112G0620	2
BOLT-UPSET,6X20 (Ref # 21)	112G0620	2
WASHER PLAIN (Ref # 22)	92022-024	2
NUT 6MM (Ref # 23)	311B0600	2
BOLT,W/P,6X18 (Ref # 24)	92132-004	2
BOLT,6X25 (Ref # 25)	92002-1137	3

© 2026 Kawasaki Motors Corp., U.S.A.