1986 Police 1000

PARTS DIAGRAM

HEADLIGHT/PURSUIT LIGHT

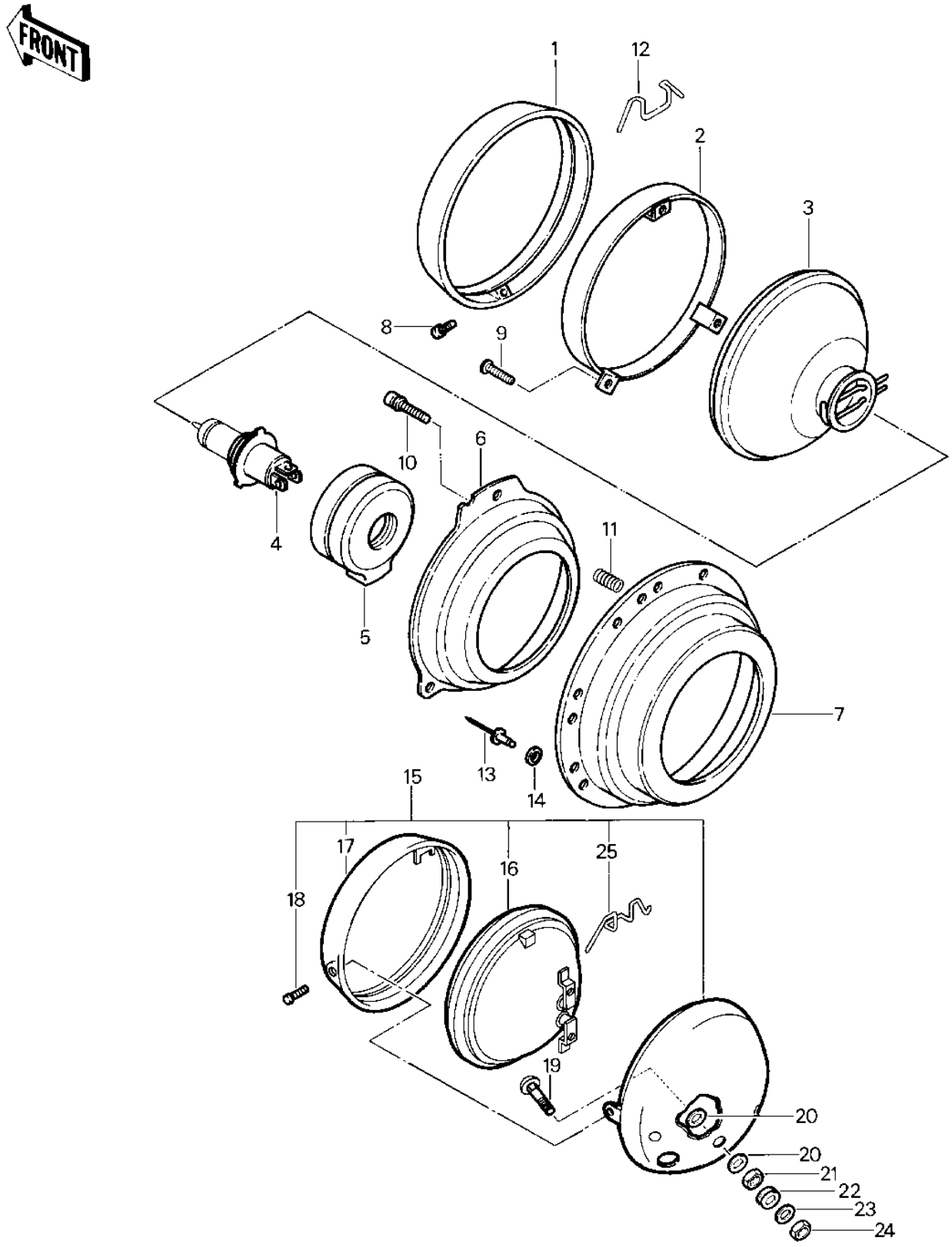

© 2026 Kawasaki Motors Corp., U.S.A.

1986 Police 1000

PARTS LIST

HEADLIGHT/PURSUIT LIGHT

ITEM NAME	PART NUMBER	QUANTITY
RIM,HEAD LAMP (Ref # 1)	23006-4002	
RETAINER (Ref # 2)	14020-4002	
LENS UNIT,HEAD LAMP (Ref # 3)	23007-1009	
BULB,12V-60/55W (Ref # 4)	92069-1002	
DUST COVER (Ref # 5)	49016-1016	
HOLDER (Ref # 6)	13091-4007	
BODY HEAD LIGHT (Ref # 7)	23005-4003	
SCREW PAN HEAD 4X14 (Ref # 8)	92009-4009	
SCREW PAN HEAD (Ref # 9)	92009-4007	
SCREW FOCUS ADJUSTING (Ref # 10)	92009-4008	
SPRING (Ref # 11)	92081-4014	
SPRING CLIP (Ref # 12)	92081-4015	
RIVET (Ref # 13)	534YW0608	
WASHER (Ref # 14)	92022-3539	
LAMP ASSY PURSUIT (Ref # 15)	23016-4004	
SEAL BEAM,PRSUT,RED (Ref # 16)	23007-1001	
SEAL BEAM,PRSUT,BLUE (Ref # 16)	23007-1002	
SEAL BEAM,PRSUT,AMBER (Ref # 16)	23007-1003	
RIM,PURSUIT LAMP (Ref # 17)	23006-4004	
SCREW-4X8,LAMP RIM (Ref # 18)	92009-4011	
BOLT,PURSUIT LIGHT (Ref # 19)	92001-4015	
WASHER PLAIN 8MM (Ref # 20)	411B0800	
NUT 6MM (Ref # 21)	312B0600	
GROMMET (Ref # 22)	92071-056	
WASHER 6.5X20X1.6T (Ref # 23)	92022-125	
NUT (Ref # 24)	92019-008	
RETAINER,CLIP (Ref # 25)	14020-1096	

© 2026 Kawasaki Motors Corp., U.S.A.