1982 Police 1000

PARTS DIAGRAM

GUARDS/SADDLEBAGS

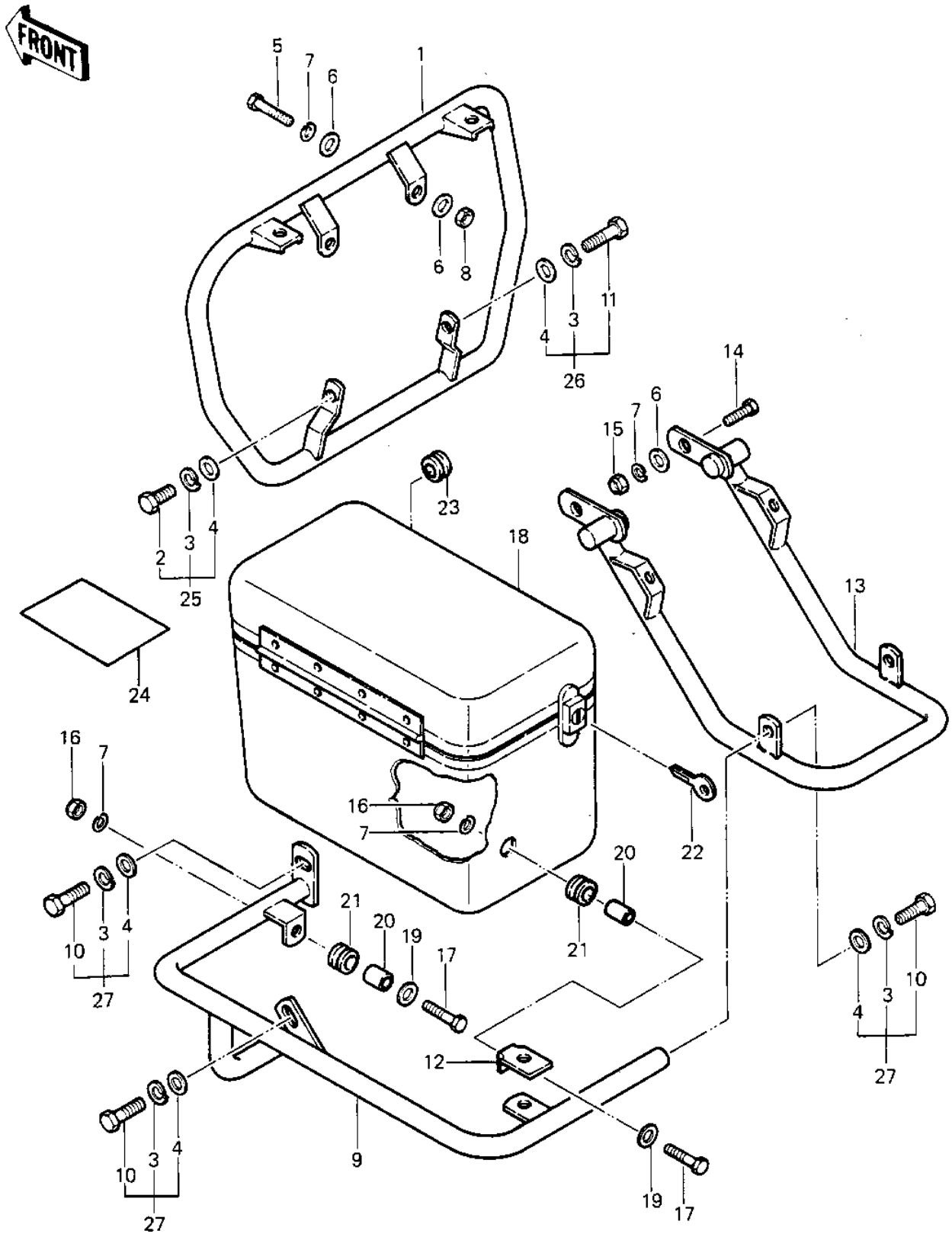

© 2026 Kawasaki Motors Corp., U.S.A.

1982 Police 1000

PARTS LIST

GUARDS/SADDLEBAGS

Kawasaki
Let the Good Times Roll®

ITEM NAME	PART NUMBER	QUANTITY
GUARD,FR (Ref # 1)	55020-1070	1
BOLT-UPSET,10X20 (Ref # 2)	112B1020	1
WASHER SPRING 10MM (Ref # 3)	461F1000	8
WASHER PLAIN 10MM (Ref # 4)	410B1000	8
WASHER PLAIN 10MM (Ref # 4)	411B1000	8
BOLT-SMALL-UPSET (Ref # 5)	115G0845	2
WASHER PLAIN 8MM (Ref # 6)	410B0800	6
WASHER SPRING 8MM (Ref # 7)	461F0800	8
NUT,8M/M (Ref # 8)	317B0800	2
GUARD,SADDLE BAG,LH (Ref # 9)	55020-1071	1
GUARD,SADDLE BAG,RH (Ref # 9)	55020-1072	1
BOLT-UPSET,10X30 (Ref # 10)	112G1030	6
BOLT,HEX HEAD 10X40 (Ref # 11)	92001-1253	1
BRACKET,CARRIER DAMPE (Ref # 12)	11034-4137	2
GUARD,RR (Ref # 13)	55020-1073	1
BOLT-SMALL-UPSET 8X25 (Ref # 14)	115G0825	2
NUT,8MM (Ref # 15)	311B0800	2
NUT,CAP,8M/M (Ref # 16)	323N0800	6
BOLT-SMALL-UPSET (Ref # 17)	115B0832	6
BOLT-SMALL-UPSET 8X25 (Ref # 17)	115G0825	6
SADDLEBAG,LH (Ref # 18)	56008-4006	1
SADDLEBAG,RH (Ref # 18)	56008-4007	1
WASHER,8.5X20X1.6 (Ref # 19)	92022-1561	6
COLLAR (Ref # 20)	92027-280	6
DAMPER,SADDLEBAG (Ref # 21)	92075-303	6
KEY SET-POLICE SDDLBG (Ref # 22)	27008-4001	AR
DAMPER-AMP HARNESS (Ref # 23)	92075-4012	1
LABEL,TIRE&LOAD DATA (Ref # 24)	56037-4012	1
UNAVAILABLE IN PRICE BOOK (Ref # 25)	162B1-020	1

© 2026 Kawasaki Motors Corp., U.S.A.