1986 Police 1000

PARTS DIAGRAM

METERS

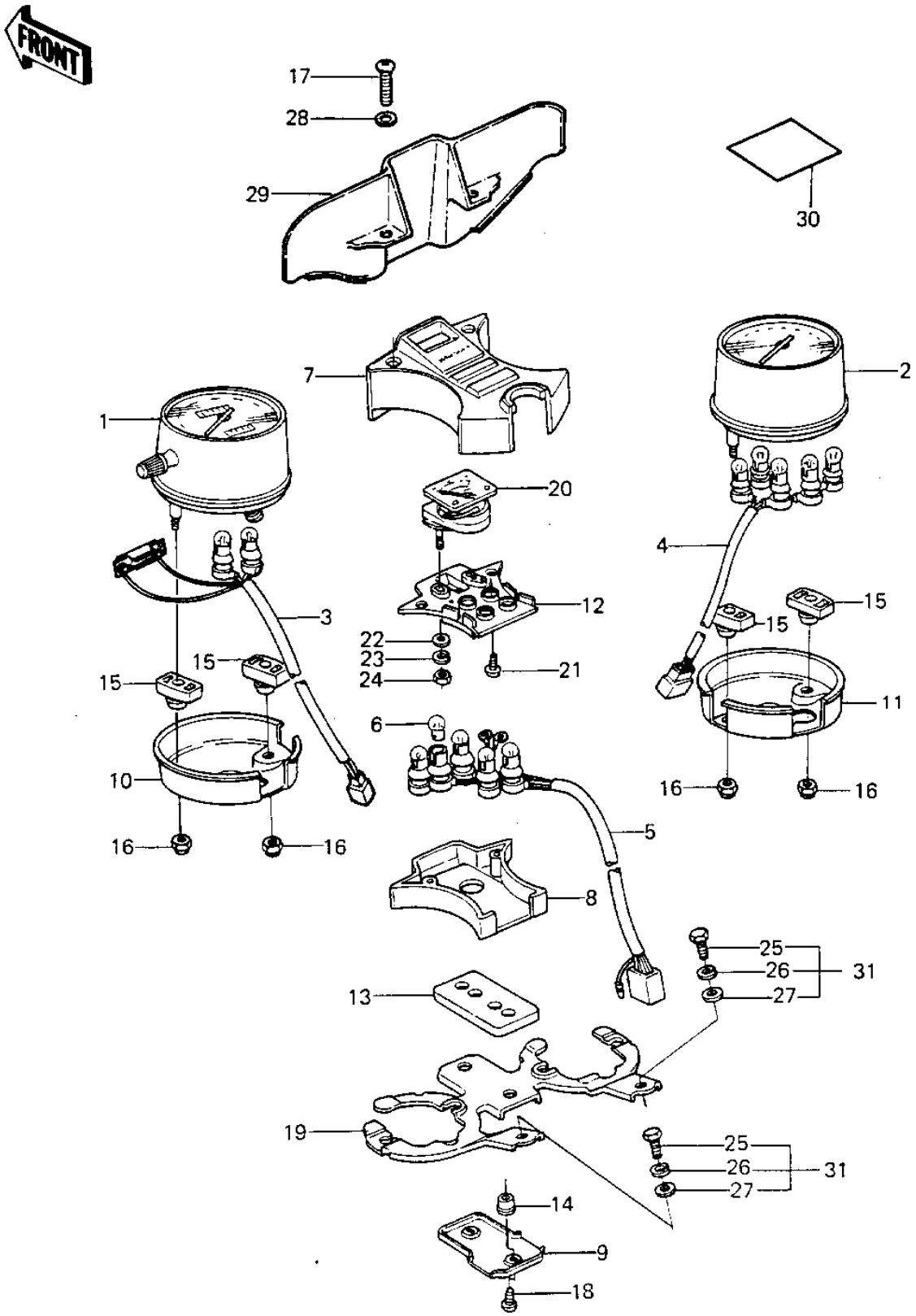

© 2026 Kawasaki Motors Corp., U.S.A.

1986 Police 1000

PARTS LIST

METERS

ITEM NAME	PART NUMBER	QUANTITY
SPEEDOMETER,MPH (Ref # 1)	25005-1170	
TACHOMETER,X1000RPM (Ref # 2)	25015-1114	
SOCKET-ASSY,SPEEDOMET (Ref # 3)	23008-1142	
SOCKET-ASSY,TACHOMETE (Ref # 4)	23008-1143	
SOCKET-ASSY,FUEL METE (Ref # 5)	23008-1144	
BULB,12V3.4W (Ref # 6)	92069-1007	
COVER-METER CASE (Ref # 7)	25023-4004	
COVER,PILOT BOX,LWR (Ref # 8)	14025-4020	
COVER,METER BRACKET (Ref # 9)	14025-1211	
COVER,SPEEDOMETER (Ref # 10)	14025-4019	
COVER,TACHOMETER (Ref # 11)	14025-1458	
PLATE,SOCKET (Ref # 12)	13169-1238	
DAMPER,PILOT BOX (Ref # 13)	92075-1246	
DAMPER RUBBER,MET FIT (Ref # 14)	25019-023	
SHOCK DAMPER,METER (Ref # 15)	92075-1101	
NUT-CAP,5MM (Ref # 16)	322C0500	
SCREW-PAN-CROS (Ref # 17)	220C0445	
SCREW,TAPPING,4X10 (Ref # 18)	92009-1040	
BRACKET-METER (Ref # 19)	25008-4001	
METER,FUEL (Ref # 20)	28011-1027	
SCREW,TAPPING (Ref # 21)	92008-012	
WASHER PLAIN 4MM (Ref # 22)	410B0400	
WASHER SPRING 4MM (Ref # 23)	461F0400	
NUT,4MM (Ref # 24)	311B0400	
BOLT-UPSET 6X14 (Ref # 25)	112B0614	
WASHER SPRING 6MM (Ref # 26)	461F0600	
WASHER PLAIN 6MM (Ref # 27)	411B0600	
WASHER-PLANE-SMALL (Ref # 28)	410F0400	
WASHER-PLANE-SMALL (Ref # 28)	410F0400	

© 2026 Kawasaki Motors Corp., U.S.A.

1986 Police 1000

PARTS LIST

METERS

ITEM NAME	PART NUMBER	QUANTITY
COVER-METER CASE (Ref # 29)	25023-4003	
LABEL,BRAKE-IN (Ref # 30)	56040-1007	
BOLT 6X14 (Ref # 31)	187B0614	

© 2026 Kawasaki Motors Corp., U.S.A.