1982 Police 1000

PARTS DIAGRAM

FUEL TANK

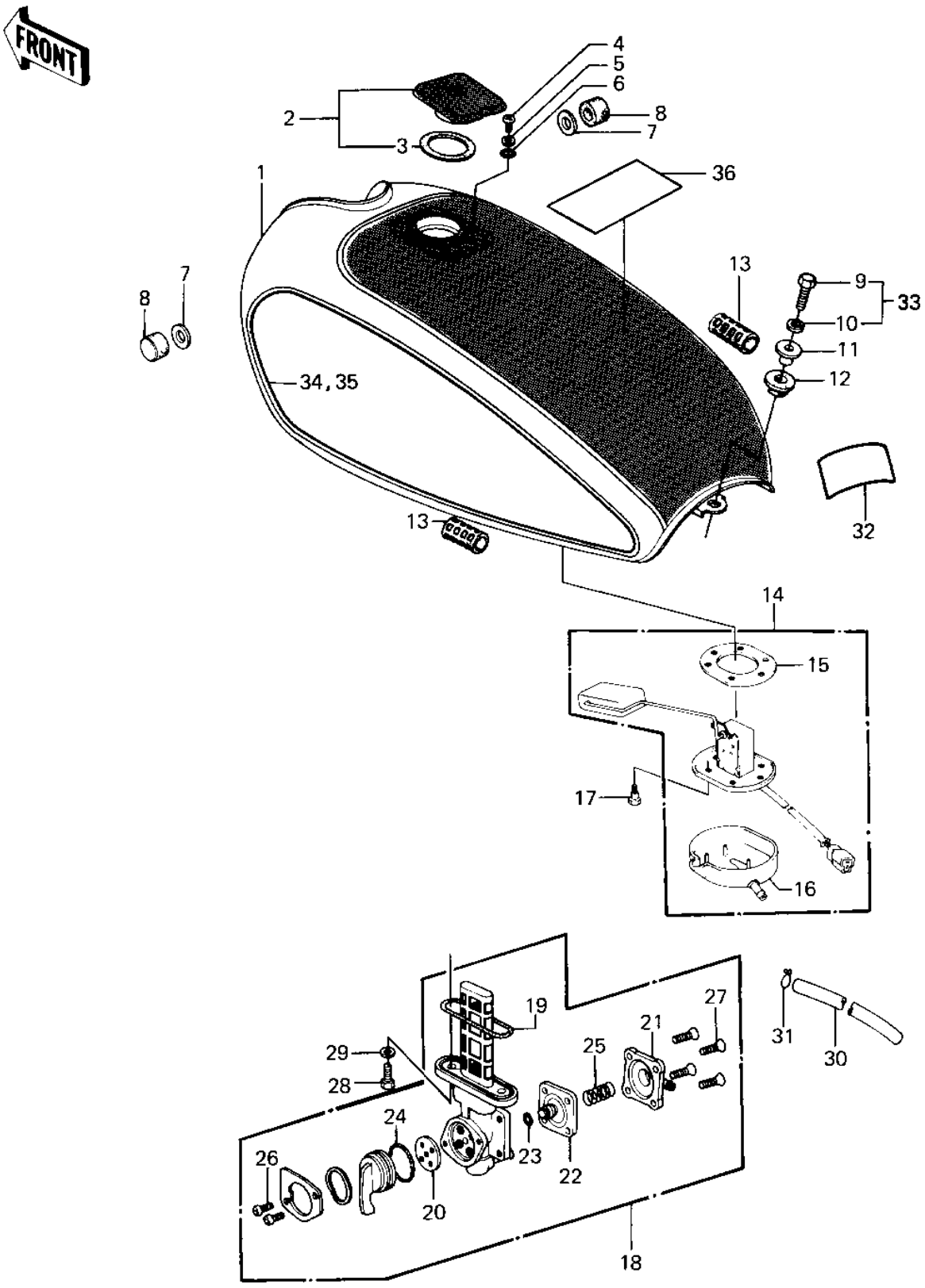

© 2026 Kawasaki Motors Corp., U.S.A.

1982 Police 1000

PARTS LIST

FUEL TANK

ITEM NAME	PART NUMBER	QUANTITY
TANK-FUEL,WHITE (Ref # 1)	51001-1101-8C	1
CAP-ASSY-TANK,FUEL (Ref # 2)	51048-1015	1
GASKET,FUEL TANK CAP (Ref # 3)	11009-1051	1
SCREW PAN HEAD 5X10 (Ref # 4)	220B0510	2
WASHER,PLAIN (Ref # 5)	92022-1038	2
"0" RING (Ref # 6)	92055-1023	2
WASHER-PL-10.5X26X2.3 (Ref # 7)	92022-044	2
DAMPER RUBBER,FL TANK (Ref # 8)	92075-125	2
BOLT-SMALL-UPSET,8X30 (Ref # 9)	115G0830	1
WASHER SPRING 8MM (Ref # 10)	461F0800	1
COLLAR,FUEL TANK FITT (Ref # 11)	92027-1134	1
DAMPER,FUEL TANK,FITT (Ref # 12)	92075-1116	1
DAMPER RUBBER (Ref # 13)	92075-084	2
GAUGE,FUEL (Ref # 14)	52005-1027	1
GASKET (Ref # 15)	11009-1037	1
COVER,FUEL GAUGE (Ref # 16)	14024-1434	1
BOLT,DRAIN (Ref # 17)	92001-1089	6
TAP-ASSY,FUEL (Ref # 18)	51023-1039	1
"0" RING (Ref # 19)	51039-010	1
GASKET,TAP VALVE (Ref # 20)	11009-1194	1
COVER ASSY,TAP (Ref # 21)	16146-1005	1
DIAPHRAGM ASSY,TAP (Ref # 22)	43028-1015	1
UNAVAILABLE IN PRICE BOOK (Ref # 23)	670B1604	1
"0" RING,TAP LEVER (Ref # 24)	92055-1027	1
SPRING,TAP (Ref # 25)	92081-1171	1
SCREW PAN HEAD 3X8 (Ref # 26)	220B0308	2
SCREW-CSK-CROS,4X14 (Ref # 27)	221B0414	4
BOLT,6X20,FUEL TAP (Ref # 28)	92001-1091	2
WASHER-PLAIN (Ref # 29)	92022-183	2

© 2026 Kawasaki Motors Corp., U.S.A.

1982 Police 1000

PARTS LIST

FUEL TANK

ITEM NAME	PART NUMBER	QUANTITY
TUBE-BREATHER (BULK) (Ref # 30)	702A071000	1
CLAMP,CHAIN OILER (Ref # 31)	92037-147	1
LABEL,AIR INTAKE (Ref # 32)	56040-1014	1
BOLT-UPSET-WS-SMALL (Ref # 33)	183B0830	1
PATTERN (Ref # 34)	56027-4073	1
PATTERN (Ref # 35)	56027-4072	1
WARNING LABEL(FUEL TANK) (Cana (Ref # 36)	99969-0847	1

© 2026 Kawasaki Motors Corp., U.S.A.