1982 Police 1000

PARTS DIAGRAM

FRONT BRAKE

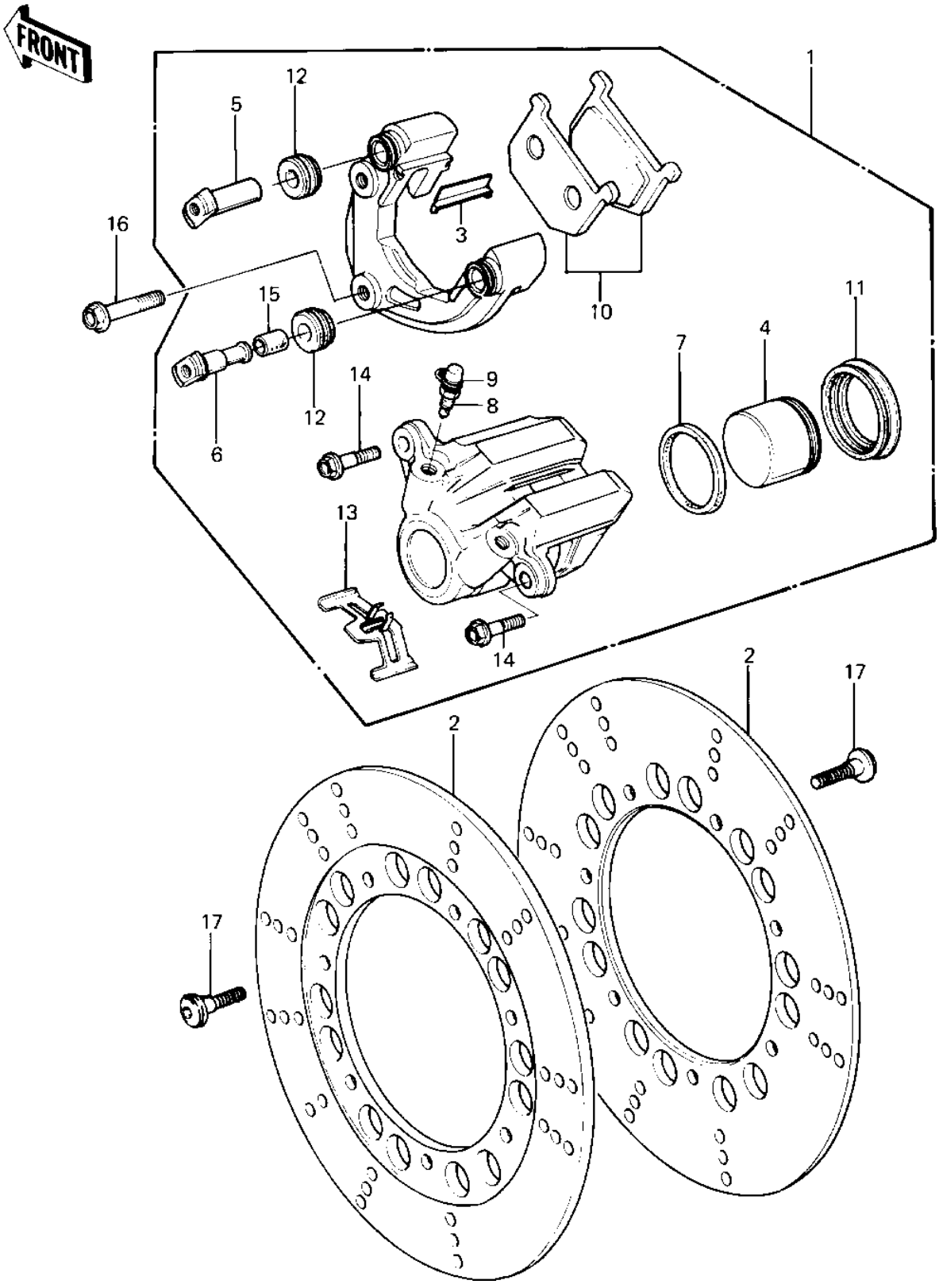

© 2026 Kawasaki Motors Corp., U.S.A.

1982 Police 1000

PARTS LIST

FRONT BRAKE

ITEM NAME	PART NUMBER	QUANTITY
CALIPER-ASSY,FR,LH (Ref # 1)	43041-1045	1
CALIPER-ASSY,FR,RH (Ref # 1)	43041-1046	1
DISK,FR (Ref # 2)	41080-1047	2
GUIDE,PAD (Ref # 3)	13070-1026	4
PISTON-COMP-BRAKE (Ref # 4)	43020-1096	2
SHAFT,CALIPER (Ref # 5)	43045-1007	2
SHAFT,CALIPER (Ref # 6)	43045-1008	2
RING,PISTON SEAL (Ref # 7)	43049-002	2
BREEDER (Ref # 8)	43056-003	2
CAP,BREEDER (Ref # 9)	43057-003	2
PAD-ASSY,FR (Ref # 10)	43082-1021	2
DUST SEAL,PISTON (Ref # 11)	49006-1043	2
DUST SEAL (Ref # 12)	49006-1044	4
SPRING,PAD (Ref # 13)	92081-1229	2
BOLT,FLANGED,8X25,BLA (Ref # 14)	92001-1510	4
BOLT,FLANGED,8X25,BLA (Ref # 14)	92001-1510	4
BUSHING,SHAFT CALIPER (Ref # 15)	92028-1090	2
BOLT,FLANGED,10X41 (Ref # 16)	92001-1355	4
BOLT,SOCKET,8X30 (Ref # 17)	92001-1951	14
BOLT,SOCKET,8X30 (Ref # 17)	92001-1951	14

© 2026 Kawasaki Motors Corp., U.S.A.