1982 Police 1000

PARTS DIAGRAM

FRONT MASTER CYLINDER

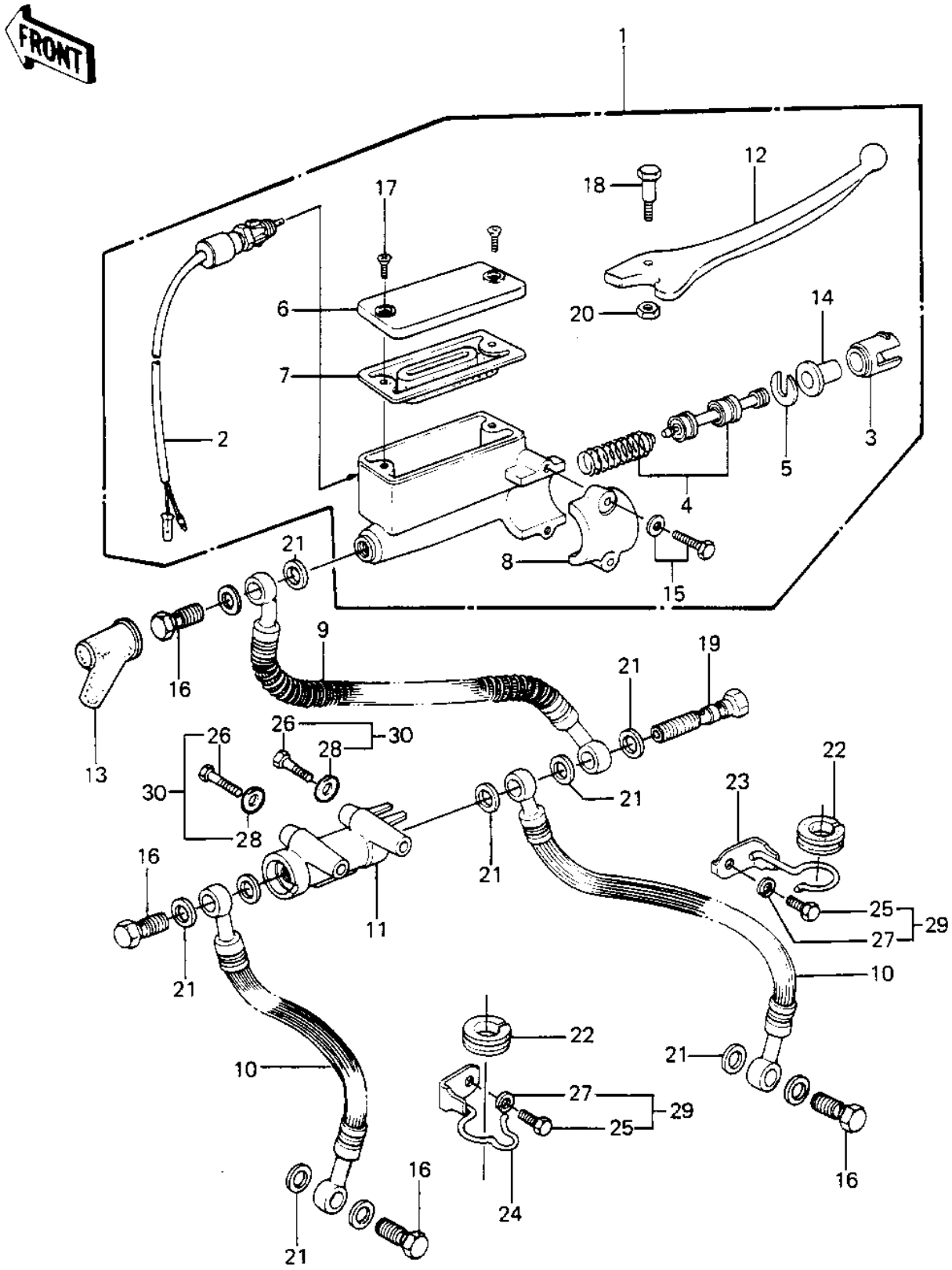

© 2026 Kawasaki Motors Corp., U.S.A.

1982 Police 1000

PARTS LIST

FRONT MASTER CYLINDER

ITEM NAME	PART NUMBER	QUANTITY
CYLINDER ASSY,FR (Ref # 1)	43015-1046	1
SWITCH,BRAKE (Ref # 2)	27010-1028	1
LINER,PISTON (Ref # 3)	14008-1007	1
PISTON-COMP-BRAKE (Ref # 4)	43020-1023	1
STOPER,PISTON (Ref # 5)	43022-1001	1
CAP,OIL CUP (Ref # 6)	43026-1006	1
DIAPHRAGM (Ref # 7)	43028-1008	1
HOLDER,MASTER CYLINDR (Ref # 8)	43034-1001	1
HOSE-BRAKE (Ref # 9)	43059-1085	1
HOSE-BRAKE,FR,L=550 (Ref # 10)	43059-1198	2
HOSE-BRAKE,FR,L=550 (Ref # 10)	43059-1198	2
JOINT BRAKE (Ref # 11)	43061-1004	1
LEVER,FRONT BRAKE (Ref # 12)	46092-1012	1
BOOT,DUST (Ref # 13)	49006-1041	1
DUST COVER (Ref # 14)	49016-1010	1
BOLT,HEX HEAD,6X25 (Ref # 15)	43033-003	2
BOLT,OIL,L=23 (Ref # 16)	92002-1888	4
BOLT,OIL,L=23 (Ref # 16)	92002-1888	4
SCREW,COUNTERSUNK HED (Ref # 17)	92001-1055	2
BOLT,CLUTCH LEV FITT (Ref # 18)	92001-1056	1
BOLT (Ref # 19)	92002-1909	1
NUT 6MM (Ref # 20)	312B0600	1
WASHER-OIL BOLT (Ref # 21)	43067-001	11
DAMPER RUBBER,CYL HSE (Ref # 22)	43064-006	2
CLAMP (Ref # 23)	92037-1218	1
CLAMP,BRAKE HOSE,LH (Ref # 24)	92037-1308	1
BOLT-UPSET,6X12 (Ref # 25)	112G0612	2
BOLT-UPSET,6X12 (Ref # 25)	112G0612	2
BOLT,FLANGED,6X65 (Ref # 26)	130G0665	2

© 2026 Kawasaki Motors Corp., U.S.A.

1982 Police 1000

PARTS LIST

FRONT MASTER CYLINDER

ITEM NAME	PART NUMBER	QUANTITY
BOLT-UPSET (Ref # 26)	112G0660	2
WASHER SPRING 6MM (Ref # 27)	461F0600	2
WASHER PLAIN 6MM (Ref # 28)	411B0600	2
BOLT 6X12 (Ref # 29)	180B0612	2
BOLT-UPSET-WP (Ref # 30)	186B0660	2

© 2026 Kawasaki Motors Corp., U.S.A.