1982 Police 1000

PARTS DIAGRAM

BRAKE PEDAL/TORQUE LINK

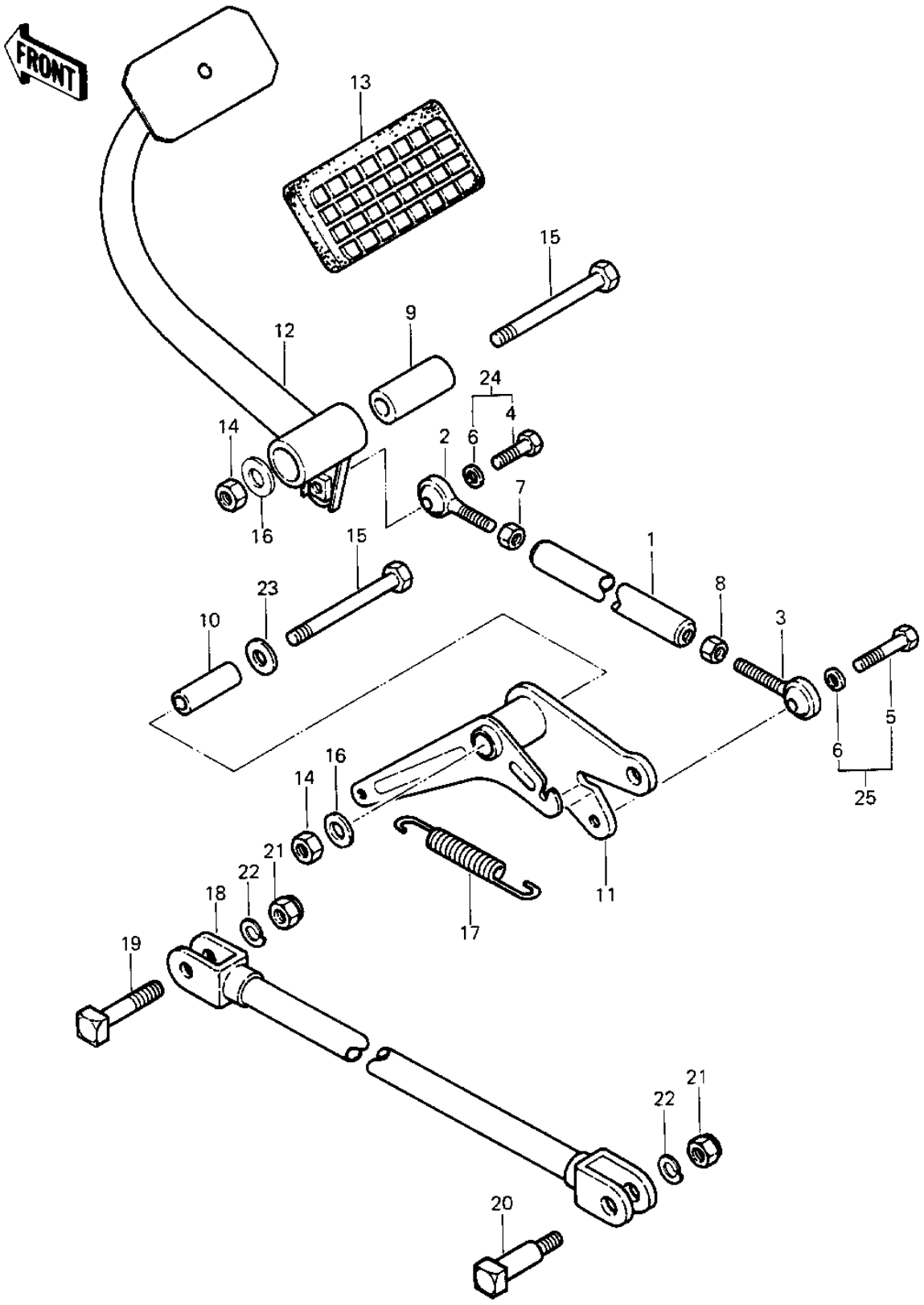

© 2026 Kawasaki Motors Corp., U.S.A.

1982 Police 1000

PARTS LIST

BRAKE PEDAL/TORQUE LINK

ITEM NAME	PART NUMBER	QUANTITY
ROD-TIE (Ref # 1)	39111-4002	1
ROD END,TIE LH MALE (Ref # 2)	39112-1002	1
ROD END,TIE RH MALE (Ref # 3)	39112-1001	1
BOLT-SMALL-UPSET 8X25 (Ref # 4)	115G0825	1
BOLT,SMALL UPSET (Ref # 5)	115G0835	1
WASHER SPRING 8MM (Ref # 6)	461F0800	2
NUT,LH THREAD (Ref # 7)	92015-1006	1
NUT,RH THREAD (Ref # 8)	92015-1005	1
SLEEVE,CHANGE LEVER (Ref # 9)	42036-4006	1
SLEEVE,CHANGE LEVER (Ref # 10)	42036-4005	1
SHAFT-BRAKE,PEDAL (Ref # 11)	43004-4002	1
LEVER-BRAKE,PEDAL (Ref # 12)	43001-4013	1
LEVER-BRAKE,PEDAL (Ref # 12)	43001-4015	1
RUBBER,BRAKE PEDAL (Ref # 13)	43091-002	1
NUT,LOCK,10MM (Ref # 14)	92019-021	2
BOLT-SMALL-FINE,10X85 (Ref # 15)	113G1085	2
WASHER-PL-10.5X26X2.3 (Ref # 16)	92022-044	2
SPRING (Ref # 17)	92081-1296	1
TORQUE ROD,REAR BRAKE (Ref # 18)	43007-1015	1
BOLT,TORQUE ROD FRONT (Ref # 19)	92001-1208	1
BOLT,SQUARE HEAD (Ref # 20)	92001-1307	1
NUT,10MM (Ref # 21)	92015-1429	2
NUT,10MM (Ref # 21)	92015-1429	2
WASHER SPRING 10MM (Ref # 22)	461F1000	2
WASHER,PLAIN (Ref # 23)	92022-1022	1
BOLT-UPSET-WS-SMALL (Ref # 24)	183G0825	1
BOLT-UPSET-WS-SMALL (Ref # 25)	183G0835	1

© 2026 Kawasaki Motors Corp., U.S.A.