1986 Police 1000

PARTS DIAGRAM

BRAKE PEDAL/TORQUE LINK

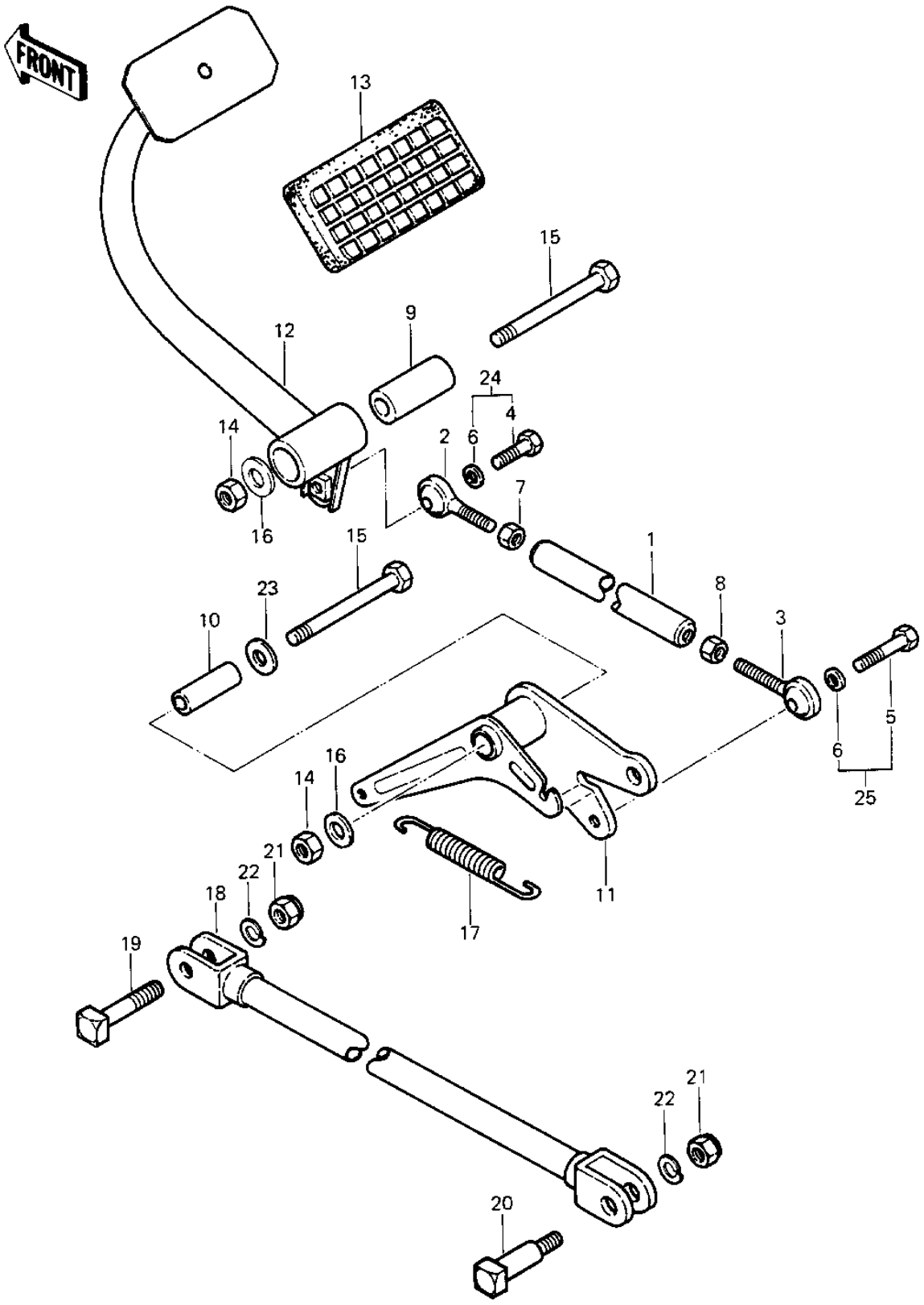

© 2026 Kawasaki Motors Corp., U.S.A.

1986 Police 1000

PARTS LIST

BRAKE PEDAL/TORQUE LINK

ITEM NAME	PART NUMBER	QUANTITY
ROD-TIE (Ref # 1)	39111-4002	
ROD END,TIE LH MALE (Ref # 2)	39112-1002	
ROD END,TIE RH MALE (Ref # 3)	39112-1001	
BOLT-SMALL-UPSET 8X25 (Ref # 4)	115G0825	
BOLT,SMALL UPSET (Ref # 5)	115G0835	
WASHER SPRING 8MM (Ref # 6)	461F0800	
NUT,LH THREAD (Ref # 7)	92015-1006	
NUT,RH THREAD (Ref # 8)	92015-1005	
SLEEVE,CHANGE LEVER (Ref # 9)	42036-4006	
SLEEVE,CHANGE LEVER (Ref # 10)	42036-4005	
SHAFT-BRAKE,PEDAL (Ref # 11)	43004-4002	
LEVER-BRAKE,PEDAL (Ref # 12)	43001-4013	
LEVER-BRAKE,PEDAL (Ref # 12)	43001-4015	
RUBBER,BRAKE PEDAL (Ref # 13)	43091-002	
NUT,LOCK,10MM (Ref # 14)	92019-021	
BOLT-SMALL-FINE,10X85 (Ref # 15)	113G1085	
WASHER-PL-10.5X26X2.3 (Ref # 16)	92022-044	
SPRING (Ref # 17)	92081-1296	
TORQUE ROD,REAR BRAKE (Ref # 18)	43007-1015	
BOLT,TORQUE ROD FRONT (Ref # 19)	92001-1208	
BOLT,SQUARE HEAD (Ref # 20)	92001-1307	
NUT,10MM (Ref # 21)	92015-1429	
NUT,10MM (Ref # 21)	92015-1429	
WASHER SPRING 10MM (Ref # 22)	461F1000	
WASHER,PLAIN (Ref # 23)	92022-1022	
BOLT-UPSET-WS-SMALL (Ref # 24)	183G0825	
BOLT-UPSET-WS-SMALL (Ref # 25)	183G0835	

© 2026 Kawasaki Motors Corp., U.S.A.