1982 Police 1000

PARTS DIAGRAM

REAR WHEEL/HUB/CHAIN

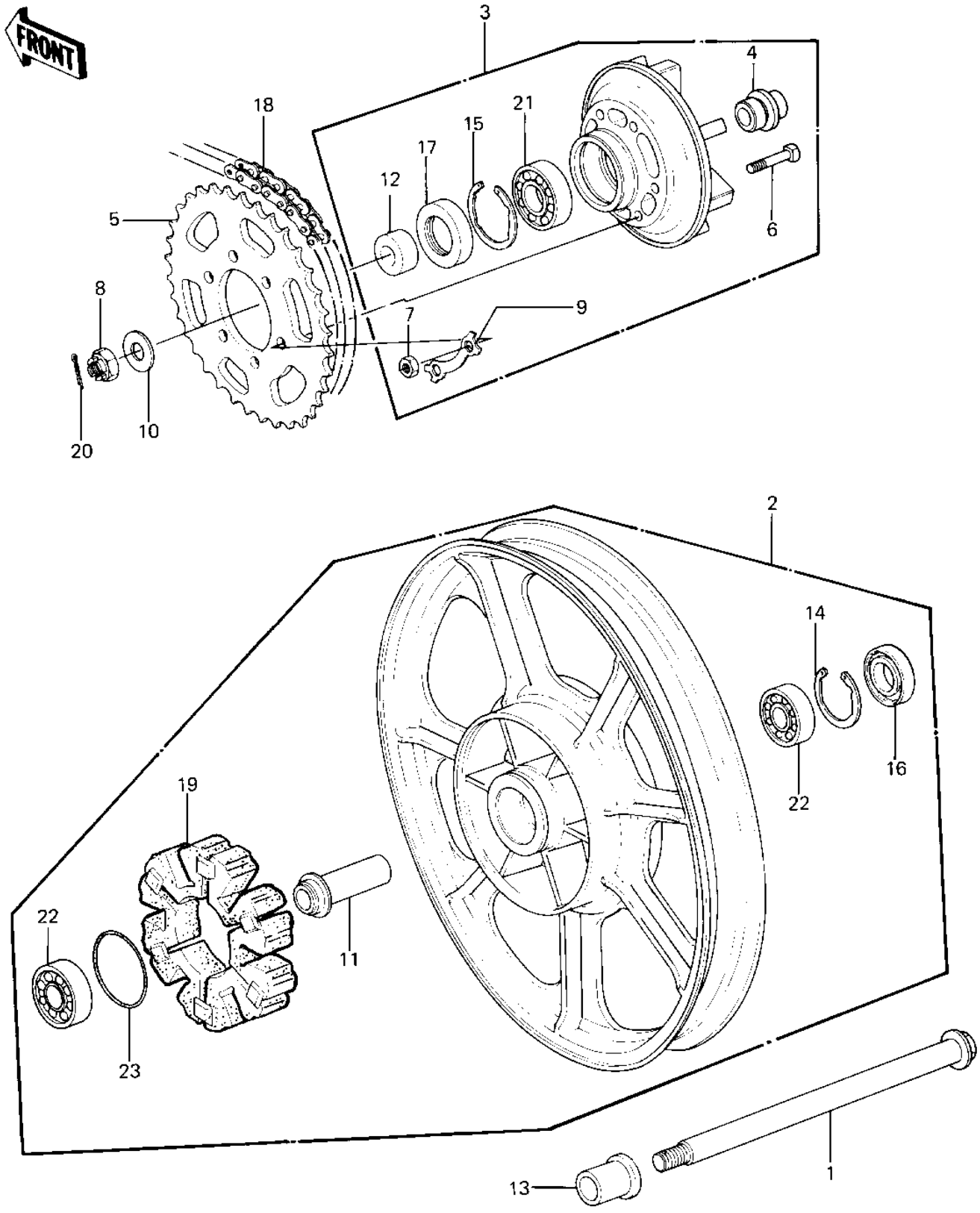

© 2026 Kawasaki Motors Corp., U.S.A.

1982 Police 1000

PARTS LIST

REAR WHEEL/HUB/CHAIN

ITEM NAME	PART NUMBER	QUANTITY
AXLE,RR,L=300 (Ref # 1)	41068-1087	1
AXLE,RR,L=300 (Ref # 1)	41068-1087	1
WHEEL-ASSY,RR,SOLID,B (Ref # 2)	41073-1141-21	1
COUPLING-ASSY (Ref # 3)	42033-1024	1
SLEEVE,L=33 (Ref # 4)	42036-1039	1
SPROCKET-HUB,41T (Ref # 5)	42041-1058	1
BOLT (Ref # 6)	92001-161	6
NUT 10MM (Ref # 7)	42045-005	6
NUT CASTLE,18MM (Ref # 8)	42045-018	1
WASHER,LOCK (Ref # 9)	92022-1212	3
WASHER,PLAIN,20MM (Ref # 10)	92022-248	1
COLLAR,L=89.5 (Ref # 11)	92027-1286	1
COLLAR,20X40X18 (Ref # 12)	92027-1287	1
COLLAR,L=31 (Ref # 13)	92027-1288	1
RING,SNAP,56.2M/M (Ref # 14)	92033-1043	1
CIRCLIP,62M/M (Ref # 15)	92033-1044	1
SEAL-OIL (Ref # 16)	92049-1061	1
OIL SEAL (Ref # 17)	92050-027	1
DR CHAIN 630X96 (Ref # 18)	92057-1053	1
DR CHAIN EK630 98L (Ref # 18)	92057-1152	1
SHOCK DAMPER,REAR HUB (Ref # 19)	42014-033	1
PIN-COTTER,4.0X35 (Ref # 20)	550D4035	1
BALL BEARING,#6206 (Ref # 21)	601B6206	1
BEARING,BALL,#6304ZZ (Ref # 22)	601B6304ZZ	2
"0" RING,65MM (Ref # 23)	671B2565	1

© 2026 Kawasaki Motors Corp., U.S.A.