1982 Police 1000

PARTS DIAGRAM

FRONT WHEEL/HUB

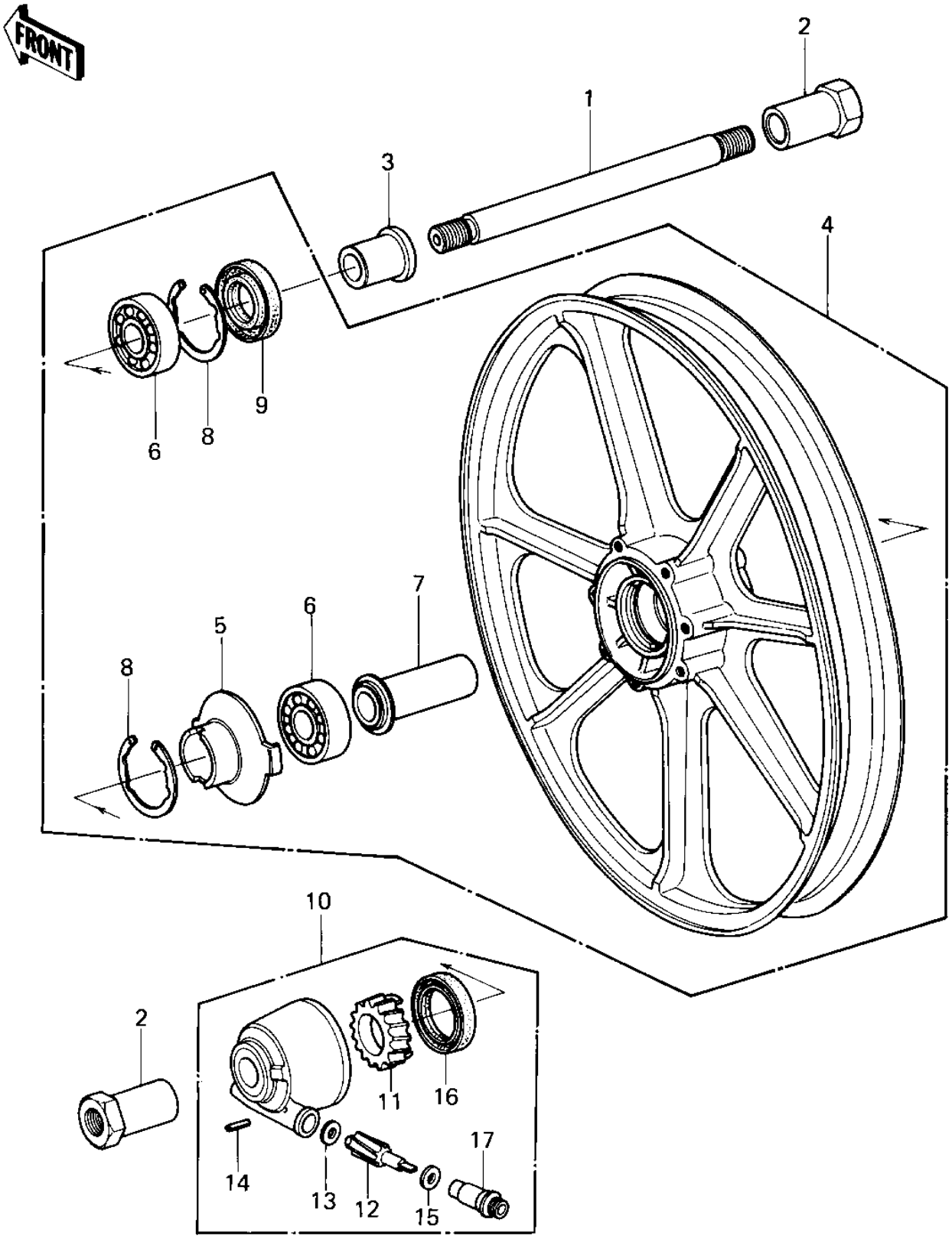

© 2026 Kawasaki Motors Corp., U.S.A.

1982 Police 1000

PARTS LIST

FRONT WHEEL/HUB

ITEM NAME	PART NUMBER	QUANTITY
AXLE,FR,L=259 (Ref # 1)	41068-1072	1
COLLAR,FRONT AXLE (Ref # 2)	41069-031	2
COLLAR,FR AXLE L=30MM (Ref # 3)	92027-1225	1
WHEEL-ASSY,FR,SOLID,B (Ref # 4)	41073-1202-21	1
WHEEL-ASSY,FR,SOLID,B (Ref # 4)	41073-1202-21	1
RECEIVER,SPEEDOMETER (Ref # 5)	41064-1006	1
BEARING BALL #6302Z (Ref # 6)	601B6302Z	2
COLLAR (Ref # 7)	92027-1437	1
CIRCLIP,42MM (Ref # 8)	92033-1041	2
OIL SEAL,AG1144AO (Ref # 9)	92049-1058	1
GEAR BOX ASSY, (Ref # 10)	41078-1013	1
GEAR,SPEEDOMETER (Ref # 11)	41059-026	1
PINION,SPEEDOMETER,9T (Ref # 12)	41060-1016	1
WASHER THRST SPD PINI (Ref # 13)	41063-001	1
PIN,SPRING (Ref # 14)	41082-001	1
WASHER THRST SPD PINI (Ref # 15)	41063-001	1
OIL SEAL,BJN30427-C3 (Ref # 16)	92049-1057	1
BUSHING,METER GEAR (Ref # 17)	92087-1002	1

© 2026 Kawasaki Motors Corp., U.S.A.