1982 Police 1000

PARTS DIAGRAM

FENDERS

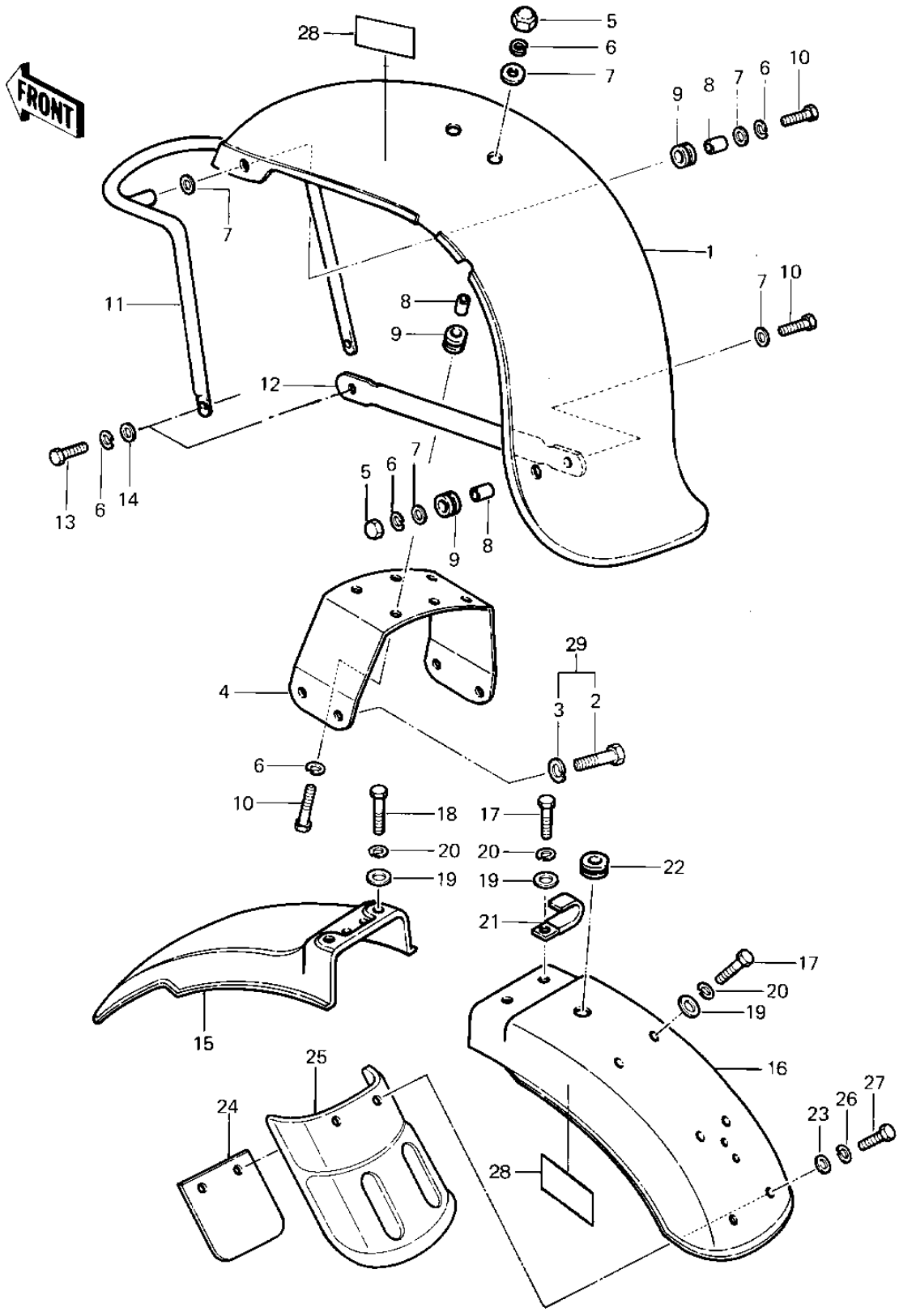

© 2026 Kawasaki Motors Corp., U.S.A.

1982 Police 1000

PARTS LIST

FENDERS

ITEM NAME	PART NUMBER	QUANTITY
FENDER-FR,WHITE (Ref # 1)	35004-4004-8C	1
FENDER-FR.JET WHITE (Ref # 1)	35004-4007-8C	1
BOLT-UPSET,6X20 (Ref # 2)	112G0620	4
WASHER SPRING 8MM (Ref # 3)	461F0800	4
BRACE,FRONT FENDER (Ref # 4)	35009-1001	1
NUT-6MM (Ref # 5)	322N0600	4
NUT-6MM (Ref # 5)	322N0600	6
WASHER SPRING 6MM (Ref # 6)	461F0600	8
WASHER SPRING 6MM (Ref # 6)	461F0600	10
WASHER-PLAIN (Ref # 7)	92022-193	8
WASHER-PLAIN (Ref # 7)	92022-193	10
COLLAR 6.8X10X10.5 (Ref # 8)	92027-120	6
COLLAR 6.8X10X10.5 (Ref # 8)	92027-120	8
GROMMET (Ref # 9)	92071-046	6
GROMMET (Ref # 9)	92071-046	8
BOLT-UPSET (Ref # 10)	112G0625	6
STAY,FR FENDER,FR (Ref # 11)	35011-4001	1
STAY,FENDER-RR (Ref # 12)	35011-4004	2
BOLT-UPSET 6X14 (Ref # 13)	112B0614	2
BOLT-UPSET 6X14 (Ref # 13)	112B0614	4
WASHER PLAIN 6MM (Ref # 14)	410B0600	2
WASHER PLAIN 6MM (Ref # 14)	410B0600	4
FENDER-RR (Ref # 15)	35022-1071	1
FENDER-RR,WHITE (Ref # 16)	35022-1099-8C	1
BOLT-UPSET 6X14 (Ref # 17)	112B0614	4
BOLT 6X22 (Ref # 18)	112B0622	2
WASHER PLAIN 6MM (Ref # 19)	411B0600	6
WASHER SPRING 6MM (Ref # 20)	461F0600	6
CLAMP,WIRING HARNESS (Ref # 21)	92037-1069	1

© 2026 Kawasaki Motors Corp., U.S.A.