1982 Police 1000

PARTS DIAGRAM

FOOTRESTS



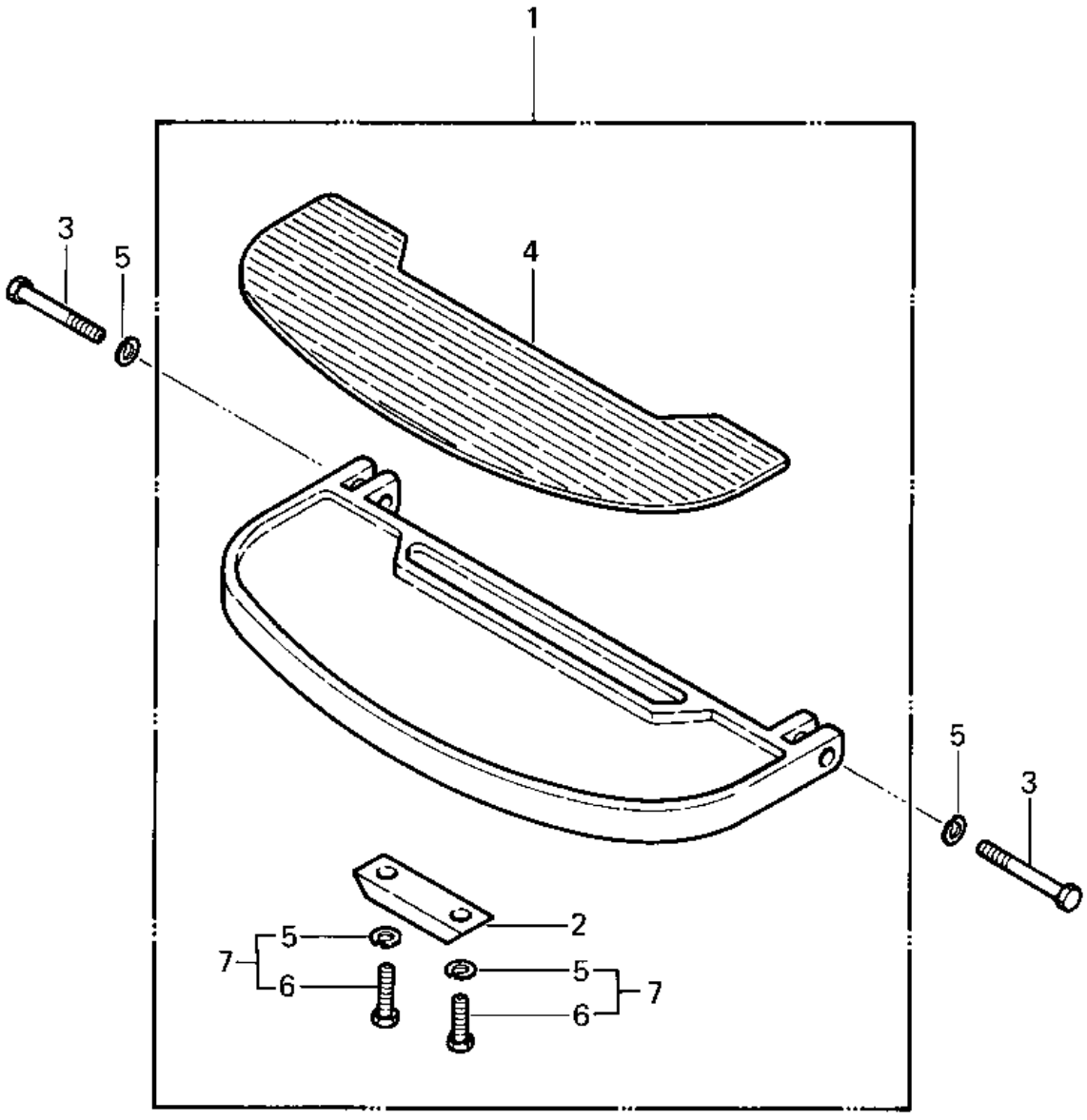

© 2026 Kawasaki Motors Corp., U.S.A.

1982 Police 1000

PARTS LIST

FOOTRESTS

ITEM NAME	PART NUMBER	QUANTITY
FOOTBOARD ASSY. (Ref # 1)	34027-1002	2
PLATE,FOOTBRD, SKID (Ref # 2)	13169-1011	2
BOLT-UPSET (Ref # 3)	112G0645	4
BOLT-UPSET (Ref # 3)	112G0645	4
DAMPER ASSY,STEP (Ref # 4)	92075-4002	2
WASHER SPRING 6MM (Ref # 5)	461F0600	8
WASHER SPRING 6MM (Ref # 5)	461F0600	4
BOLT,6X10 (Ref # 6)	112G0610	4
BOLT (6X10) (Ref # 7)	180B0610	4

© 2026 Kawasaki Motors Corp., U.S.A.