1982 Police 1000

PARTS DIAGRAM

GEAR CHANGE MECHANISM

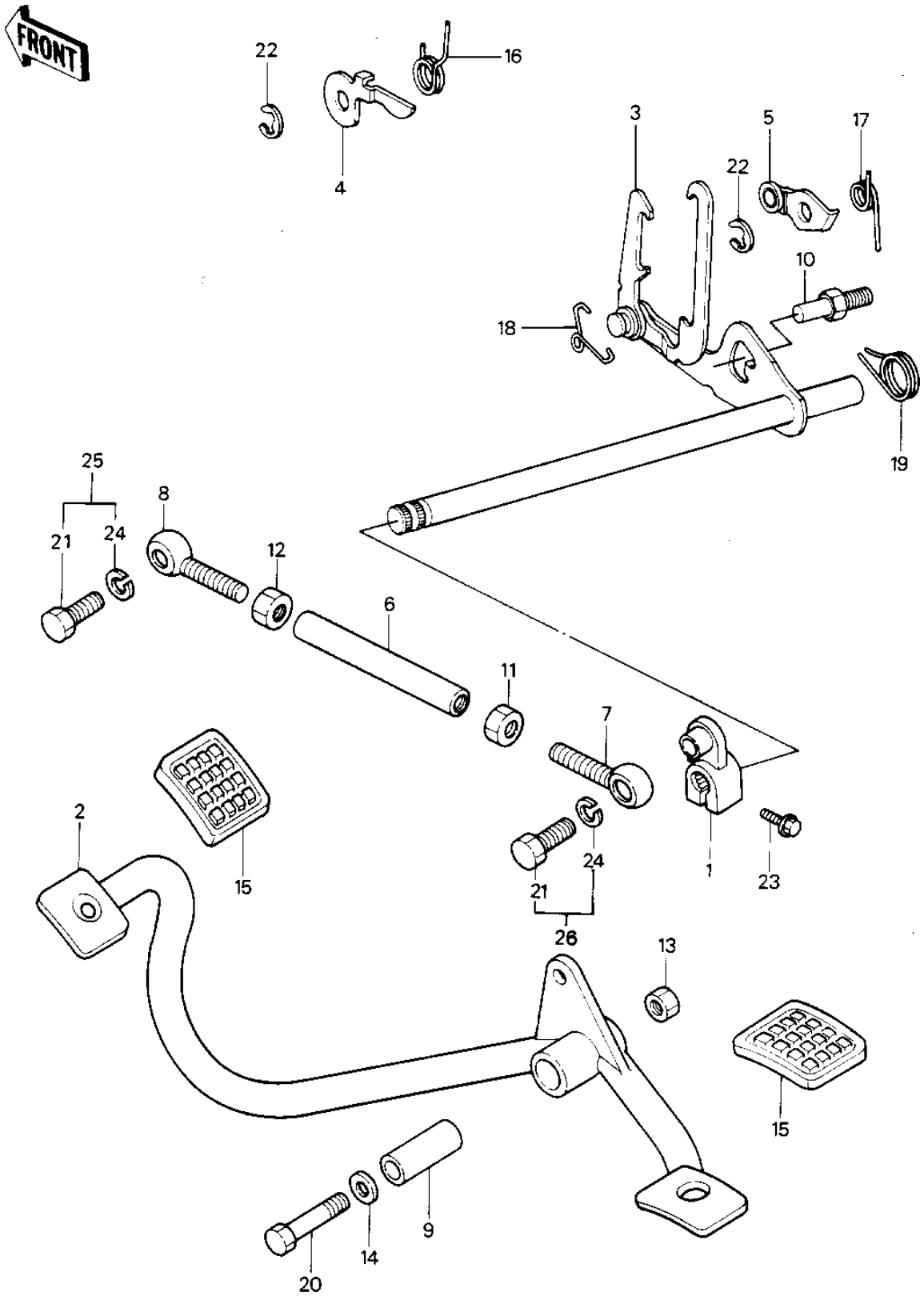

© 2026 Kawasaki Motors Corp., U.S.A.

1982 Police 1000

PARTS LIST

GEAR CHANGE MECHANISM

ITEM NAME	PART NUMBER	QUANTITY
LEVER,GEAR CHANGE (Ref # 1)	13156-4001	1
LEVER-CHANGE,PEDAL (Ref # 2)	13156-4002	1
LEVER-COMP-CHANGE SHA (Ref # 3)	13161-1023	1
LEVER,GEAR POSITIONIN (Ref # 4)	13168-1074	1
LEVER-COMP,NEUTRAL PO (Ref # 5)	13236-1029	1
ROD-TIE (Ref # 6)	39111-4001	1
ROD END,TIE RH MALE (Ref # 7)	39112-1001	1
ROD END,TIE LH MALE (Ref # 8)	39112-1002	1
SLEEVE,CHANGE LEVER (Ref # 9)	42036-4006	1
BOLT,RETURN SPRING (Ref # 10)	92001-1401	1
NUT,RH THREAD (Ref # 11)	92015-1005	1
NUT,LH THREAD (Ref # 12)	92015-1006	1
NUT,LOCK,10MM (Ref # 13)	92019-021	1
WASHER-PL-10.5X26X2.3 (Ref # 14)	92022-044	1
DAMPER,CHANGE PEDAL (Ref # 15)	92075-4031	2
SPRING,POSITIONING LE (Ref # 16)	92081-1284	1
SPRING (Ref # 17)	92081-1285	1
SPRING,KICK PAWL (Ref # 18)	92083-018	1
SPRING,CHG PEDL RTRN (Ref # 19)	92083-028	1
SPRING,CHANGE PEDAL R (Ref # 19)	92081-1589	1
BOLT-SMALL-FINE,10X85 (Ref # 20)	113G1085	1
BOLT-SMALL-FINE (Ref # 20)	113Y1085	1
BOLT-SMALL-UPSET 8X25 (Ref # 21)	115G0825	2
CIRCLIP 6MM (Ref # 22)	482J6000	2
BOLT-FLANGED,6X20 (Ref # 23)	130P0620	1
BOLT,6X20 (Ref # 23)	92002-1237	1
WASHER SPRING 8MM (Ref # 24)	461F0800	2
BOLT-WS-SMALL (Ref # 25)	153Y0825	1
BOLT-WS-SMALL (Ref # 26)	153Y0835	1

© 2026 Kawasaki Motors Corp., U.S.A.