1982 Police 1000

PARTS DIAGRAM

CAMSHAFTS/CHAIN/TENSIONER

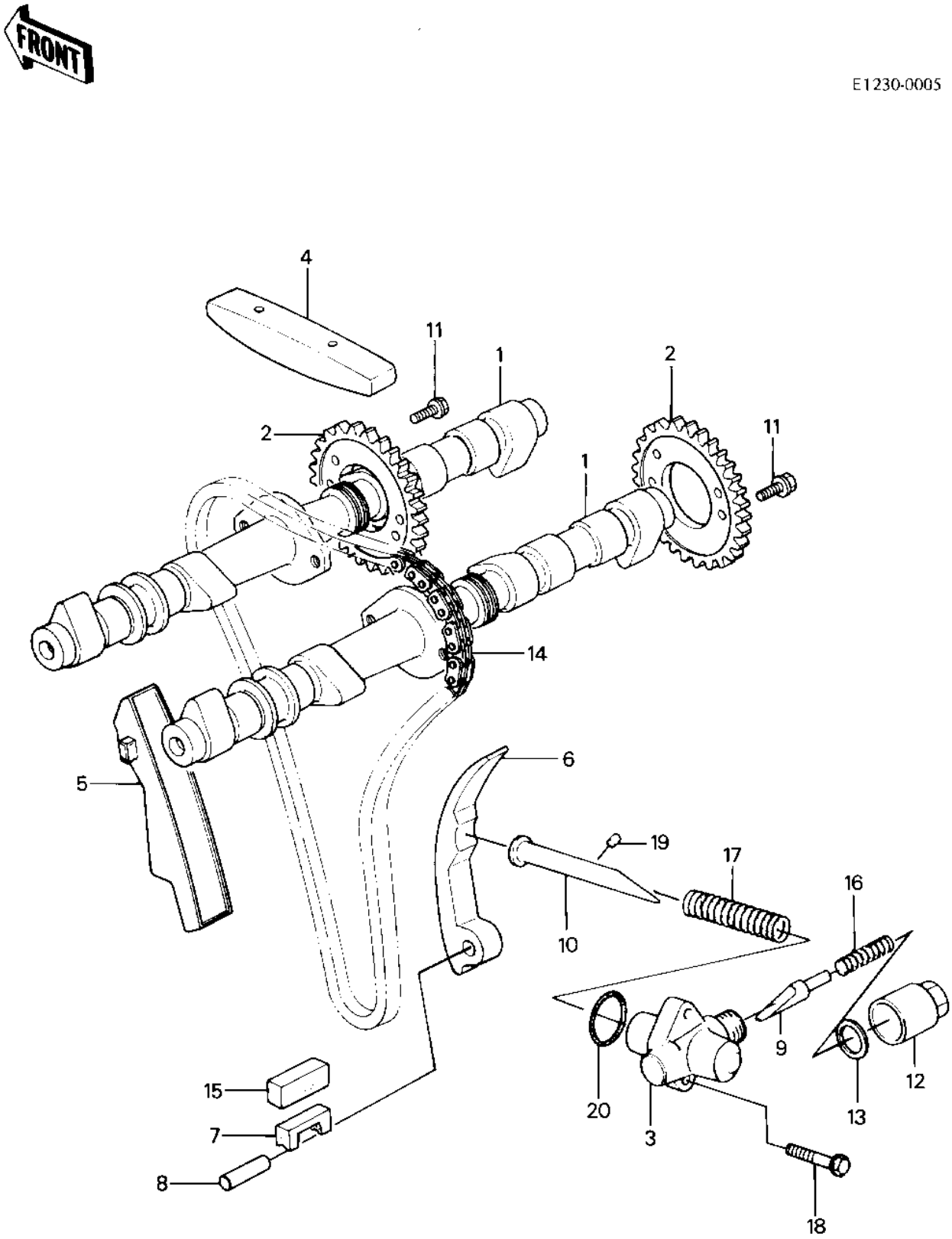

© 2026 Kawasaki Motors Corp., U.S.A.

1982 Police 1000

PARTS LIST

CAMSHAFTS/CHAIN/TENSIONER

ITEM NAME	PART NUMBER	QUANTITY
CAMSHAFT-VALVE (Ref # 1)	12044-1027	2
SPROCKET,CAMSHAFT EXH (Ref # 2)	12046-1025	2
TENSIONER,CAM CHAIN (Ref # 3)	12049-1009	1
GUIDE,CAM CHAIN,HEAD (Ref # 4)	12053-1018	1
GUIDE-CHAIN,CAM,FR (Ref # 5)	12053-1048	1
GUIDE-CHAIN,CAM,RR (Ref # 6)	12053-1049	1
HOLDER,CAM CHAIN GUID (Ref # 7)	13091-1084	1
SHAFT,8X28 (Ref # 8)	13107-1020	1
ROD,PUSH,CAM CHAIN (Ref # 9)	13116-1012	1
ROD-PUSH,TENSIONER (Ref # 10)	13116-1038	1
BOLT,SPROCKET FITTING (Ref # 11)	92003-208	4
CAP,TENSIONER,18M/M (Ref # 12)	92015-1100	1
WASHER,18.3X24X1.4T (Ref # 13)	92022-1175	1
CHAIN,CAMSHAFT,75-010 (Ref # 14)	92057-1052	1
DAMPER (Ref # 15)	92075-1270	1
SPRING,TENSIONER (Ref # 16)	92081-1302	1
SPRING,TENSIONER (Ref # 17)	92081-1380	1
BOLT,FLANGED,6X25 (Ref # 18)	130G0625	2
BOLT-FLANGED (Ref # 18)	130Y0625	2
PIN DOWEL 4X8 (Ref # 19)	610A0408	1
"O" RING,22M/M (Ref # 20)	670E2022	1

© 2026 Kawasaki Motors Corp., U.S.A.