1986 Police 1000

PARTS DIAGRAM

CYLINDER/PISTON

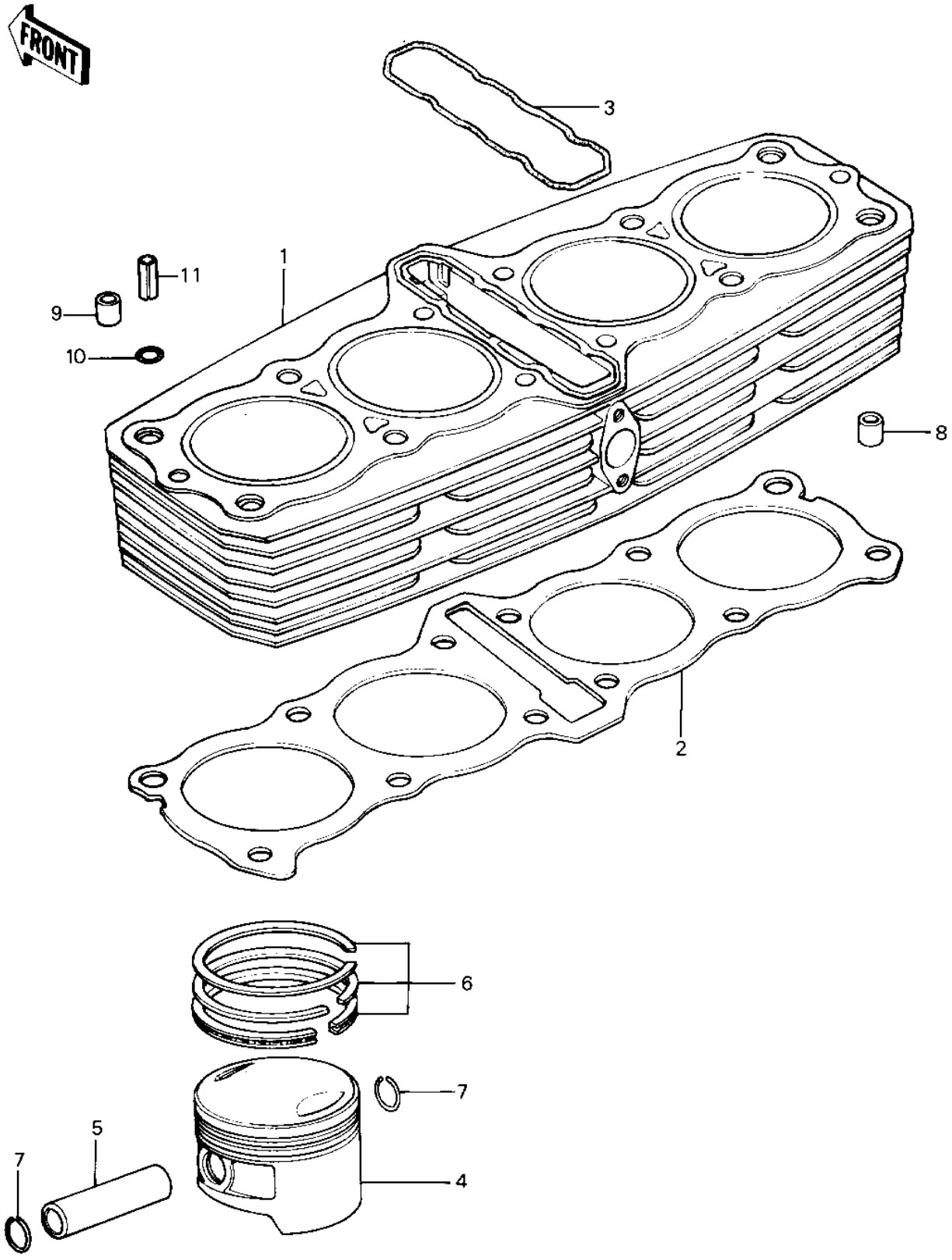

© 2026 Kawasaki Motors Corp., U.S.A.

1986 Police 1000

PARTS LIST

CYLINDER/PISTON

ITEM NAME	PART NUMBER	QUANTITY
11005-1327 (Canada) (Ref # 1)	11005-1116	
CYLINDER-ENGINE,SILVE (Ref # 1)	11005-1327	
GASKET,CYLINDER BASE (Ref # 2)	11060-1067	
GASKET,CYLINDER (Ref # 3)	11009-1208	
PISTON-ENGINE,STD (Ref # 4)	13001-1119	
PISTON-ENGINE,STD (Ref # 4)	13001-1119	
PISTON-ENGINE L,O/S (Ref # 4)	13029-1058	
PISTON-ENGINE L,O/S (Ref # 4)	13029-1058	
PISTON-ENGINE LL,O/S (Ref # 4)	13027-1056	
PISTON-ENGINE LL,O/S (Ref # 4)	13027-1056	
PIN-PISTON (Ref # 5)	13002-1013	
RING-SET-PISTON (Ref # 6)	13008-5035	
RING-SET-PISTON,STD (Ref # 6)	13008-5056	
RING SET,050 0/S (Ref # 6)	13025-5018	
RING-SET PISTON L,O/S (Ref # 6)	13025-5024	
RING SET,1.10 O/S (Ref # 6)	13024-5018	
RING-SET PISTON LL (Ref # 6)	13024-5024	
RING-SNAP (Ref # 7)	92033-1054	
PIN,11X14X12.3 (Ref # 8)	92043-1266	
PIN,DOWEL,10X8.2X14 (Ref # 9)	92043-1037	
RING-0,0D=18.5MM (Ref # 10)	92055-1148	
RING-0,0D=18.5MM (Ref # 10)	92055-1148	
PIN-SPRING (Ref # 11)	49035-1051	

© 2026 Kawasaki Motors Corp., U.S.A.