1982 Spectre

PARTS DIAGRAM

IGNITION SWITCH/LOCKS/REFLECTORS

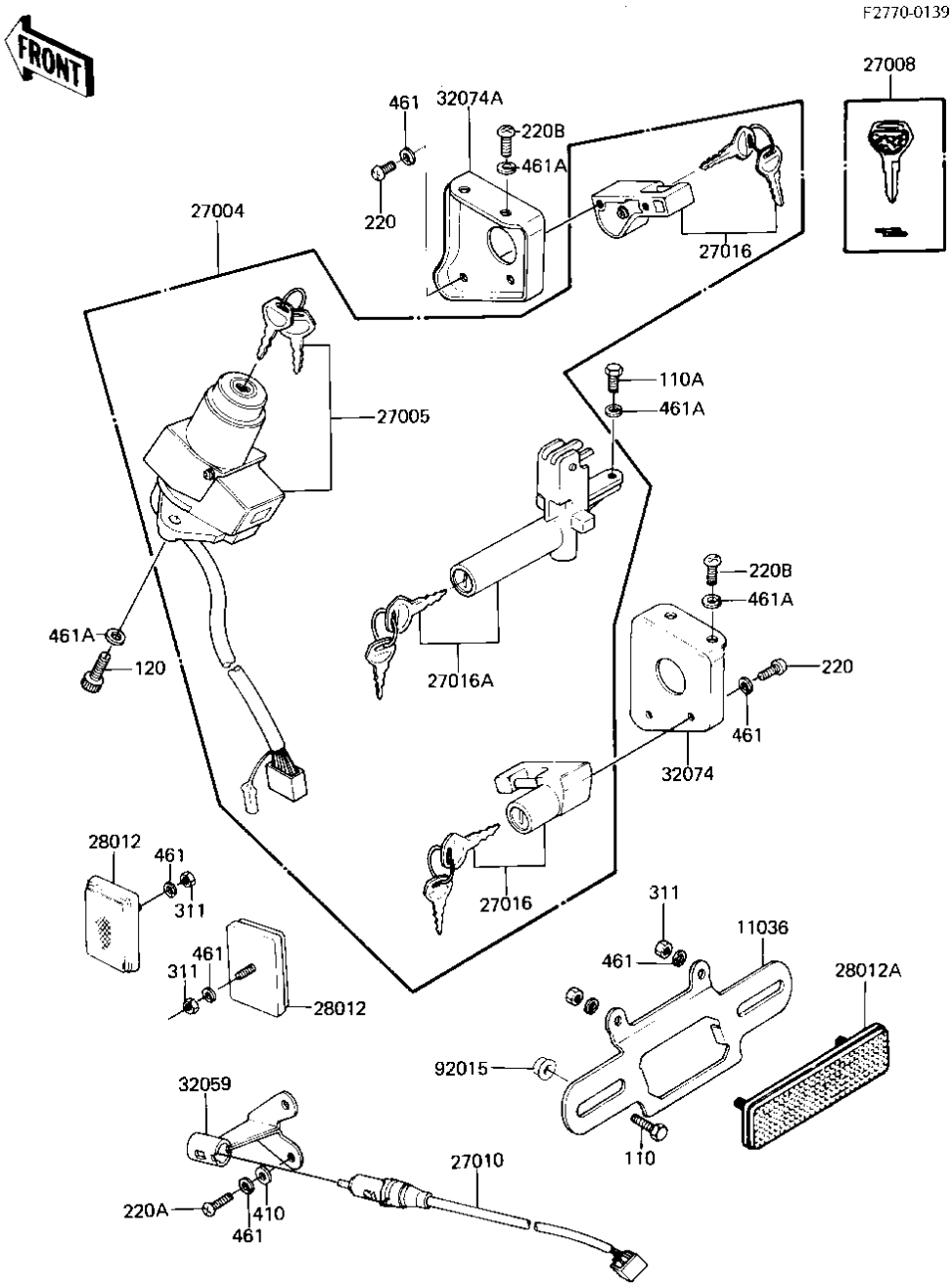

© 2026 Kawasaki Motors Corp., U.S.A.

1982 Spectre

PARTS LIST

IGNITION SWITCH/LOCKS/REFLECTORS

ITEM NAME	PART NUMBER	QUANTITY
BRACKET,REFLECTOR,RR (Ref # 11036)	11036-1150	1
SWITCH-ASSY (Ref # 27004)	27004-5165	1
SWITCH-ASSY-IGNITION (Ref # 27005)	27005-5024	1
KEY-LOCK,BLANK (Ref # 27008)	27008-1103	1
SWITCH,BRAKE LAMP (Ref # 27010)	27010-1060	1
LOCK ASSY,HELMET (Ref # 27016)	27016-5038	2
LOCK-ASSY,SEAT (Ref # 27016A)	27016-5051	1
REFLECTOR,REFLEX(FRO (Ref # 28012)	28012-1003	2
REFLECTOR,REAR REFLE (Ref # 28012A)	28012-1005	1
BRACKET-SWITCH,BRAKE (Ref # 32059)	32059-1021	1
BRACKET-LOCK,HELMET, (Ref # 32074)	32074-1030	1
BRACKET-LOCK,HELMET, (Ref # 32074A)	32074-1031	1
NUT-6MM (Ref # 92015)	92015-1078	2
BOLT-UPSET,6X12 (Ref # 110)	112G0612	2
BOLT-UPSET 6X14 (Ref # 110A)	112B0614	1
BOLT-SOCKET,6X16,BLA (Ref # 120)	120S0616	2
SCREW PAN HEAD 5X8 (Ref # 220)	220B0508	4
SCREW PAN HEAD 5X12 (Ref # 220A)	220B0512	2
SCREW PAN HEAD 6X12 (Ref # 220B)	220B0612	4
NUT,5MM (Ref # 311)	311B0500	4
WASHER PLAIN 5MM (Ref # 410)	410B0500	2
WASHER SPRING 5MM (Ref # 461)	461F0500	10
WASHER SPRING 6MM (Ref # 461A)	461F0600	7

© 2026 Kawasaki Motors Corp., U.S.A.