1982 GPz

PARTS DIAGRAM

SWING ARM/SHOCK ABSORBERS

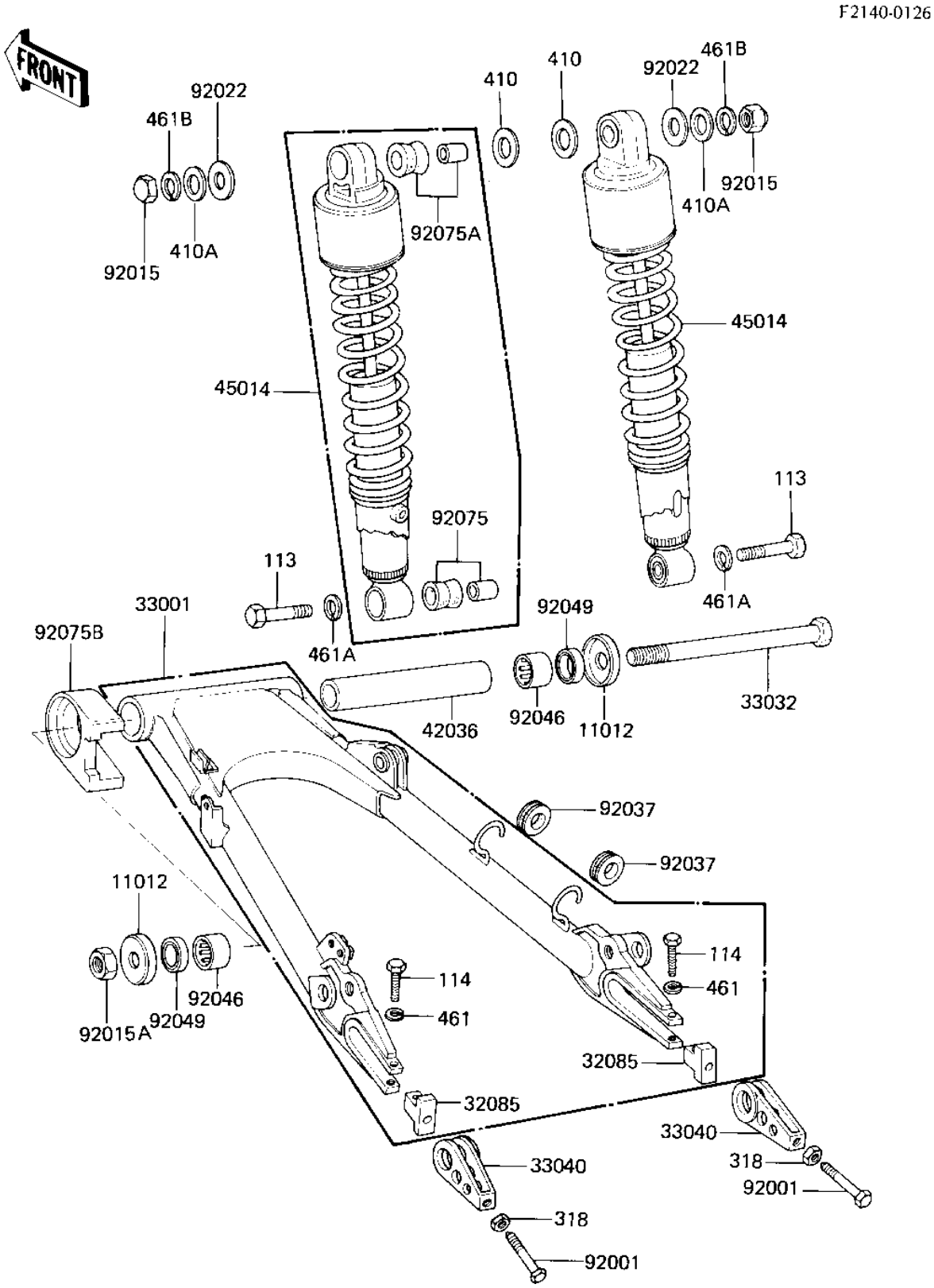

© 2026 Kawasaki Motors Corp., U.S.A.

1982 GPz

PARTS LIST

SWING ARM/SHOCK ABSORBERS

Kawasaki
Let the Good Times Roll®

ITEM NAME	PART NUMBER	QUANTITY

© 2026 Kawasaki Motors Corp., U.S.A.