2002 1100 ZXi

PARTS DIAGRAM

Handle Pole

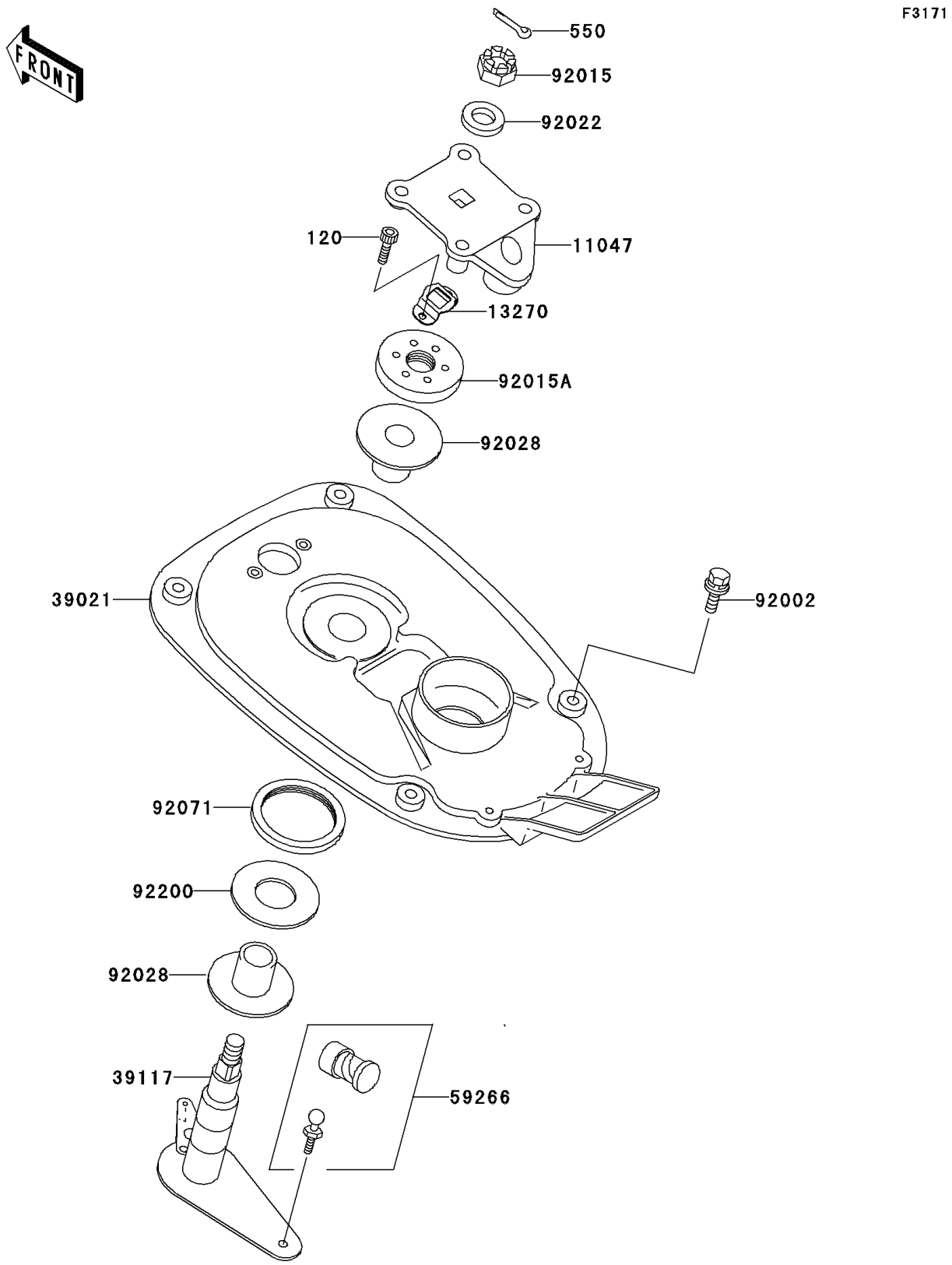

© 2026 Kawasaki Motors Corp., U.S.A.

2002 1100 ZXi

PARTS LIST

Handle Pole

ITEM NAME	PART NUMBER	QUANTITY

© 2026 Kawasaki Motors Corp., U.S.A.