1991 TS

PARTS DIAGRAM

Muffler(s)

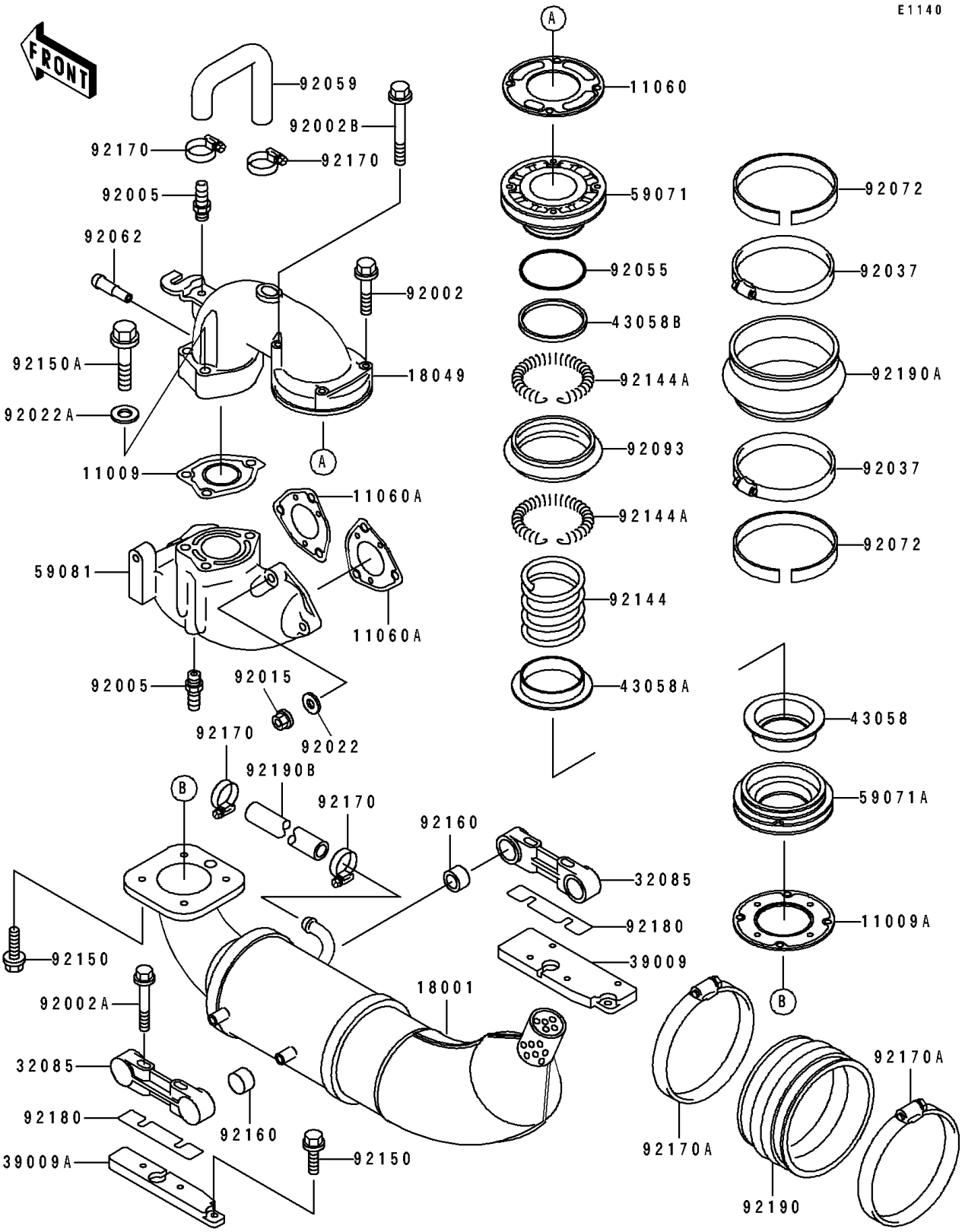

© 2026 Kawasaki Motors Corp., U.S.A.

1991 TS

PARTS LIST

Muffler(s)

Kawasaki
Let the Good Times Roll®

ITEM NAME	PART NUMBER	QUANTITY
GASKET,EXHAUST PIPE (Ref # 11009)	11009-3752	1
GASKET,MUFFLER (Ref # 11009A)	11009-3756	1
GASKET,EXHAUST PIPE (Ref # 11060)	11060-3718	1
GASKET,EXHAUST PIPE (Ref # 11060A)	11060-3721	2
MUFFLER (Ref # 18001)	18001-3734	1
PIPE-EXHAUST (Ref # 18049)	18049-3727	1
STOPPER (Ref # 32085)	32085-3713	2
BLOCK-MOUNT,RH (Ref # 39009)	39009-3703	1
BLOCK-MOUNT,LH (Ref # 39009A)	39009-3704	1
RING (Ref # 43058)	43058-3702	1
RING (Ref # 43058A)	43058-3703	1
RING (Ref # 43058B)	43058-3704	1
JOINT (Ref # 59071)	59071-3722	1
JOINT (Ref # 59071A)	59071-3731	1
MANIFOLD-EXHAUST (Ref # 59081)	59081-3706	1
BOLT,6X35 (Ref # 92002)	92002-3715	2
BOLT,6X45 (Ref # 92002A)	92002-3717	4
BOLT,6X65 (Ref # 92002B)	92002-3720	2
FITTING,HOSE (Ref # 92005)	92005-3712	2
NUT,CAP,8MM (Ref # 92015)	92015-1371	6
WASHER,8.2X18X1.5 (Ref # 92022)	92022-1964	6
WASHER,10.2X20X1.5 (Ref # 92022A)	92022-3742	3
CLAMP (Ref # 92037)	92037-3706	2
RING-O (Ref # 92055)	92055-3717	1
TUBE,HEAD-EXHAUST (Ref # 92059)	92059-3872	1
NOZZLE (Ref # 92062)	92062-3705	1
BAND,ID=111 (Ref # 92072)	92072-3740	2
SEAL (Ref # 92093)	92093-3732	1
SPRING (Ref # 92144)	92144-3718	1

© 2026 Kawasaki Motors Corp., U.S.A.

1991 TS

PARTS LIST

Muffler(s)

Kawasaki
Let the Good Times Roll®

ITEM NAME	PART NUMBER	QUANTITY
SPRING (Ref # 92144A)	92144-3726	2
BOLT,6X18 (Ref # 92150)	92150-3729	8
BOLT,10X50 (Ref # 92150A)	92150-3819	3
DAMPER (Ref # 92160)	92160-3740	4
CLAMP (Ref # 92170)	92170-3718	4
CLAMP (Ref # 92170A)	92170-3721	2
SHIM (Ref # 92180)	92180-3701	AR
TUBE (Ref # 92190)	92190-3709	1
TUBE,JOINT (Ref # 92190A)	92190-3712	1
TUBE,13X19X140 (Ref # 92190B)	92190-3714	1

© 2026 Kawasaki Motors Corp., U.S.A.