2002 Ninja® 500R

PARTS DIAGRAM

Rear Master Cylinder

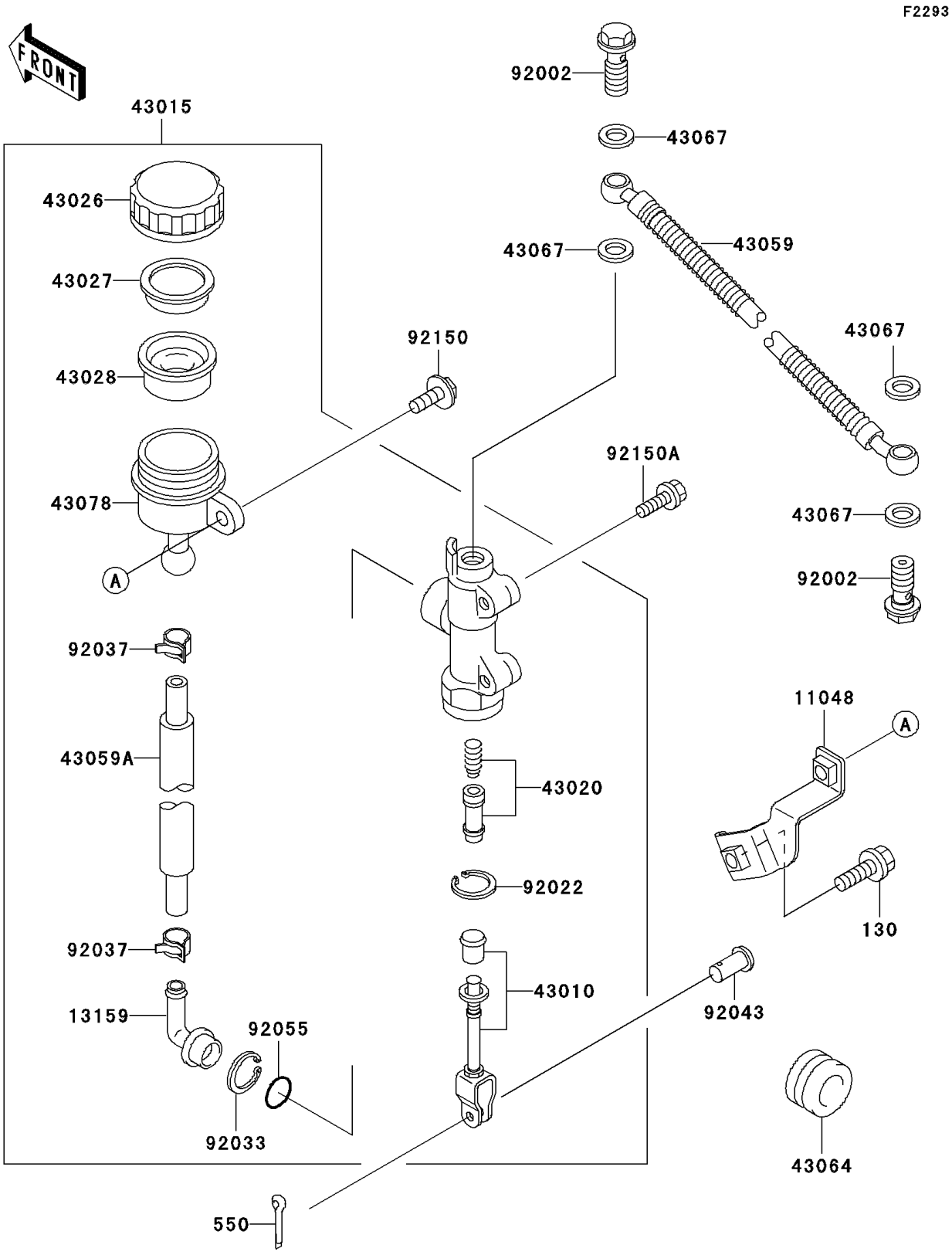

© 2026 Kawasaki Motors Corp., U.S.A.

2002 Ninja® 500R

PARTS LIST

Rear Master Cylinder

ITEM NAME	PART NUMBER	QUANTITY
BOLT-FLANGED (Ref # 130)	130J0612	1
PIN-COTTER,2.0X15 (Ref # 550)	550D2015	1
BRACKET,RESERVOIR TANK (Ref # 11048)	11048-1363	1
CONNECTOR (Ref # 13159)	13159-1056	1
ROD-ASSY-BRAKE (Ref # 43010)	43010-1055	1
CYLINDER-ASSY-MASTER,RR (Ref # 43015)	43015-1555	1
PISTON-COMP-BRAKE (Ref # 43020)	43020-1094	1
CAP-BRAKE (Ref # 43026)	43026-1077	1
PLATE-DIAPHRAGM (Ref # 43027)	43027-1053	1
DIAPHRAGM (Ref # 43028)	43028-1065	1
HOSE-BRAKE,RR (Ref # 43059)	43059-1779	1
HOSE-BRAKE,RR MASTER CYLINDER (Ref # 43059A)	43059-1780	1
GROMMET,HOSE CLAMP (Ref # 43064)	43064-007	1
WASHER,10.5X15X1.5 (Ref # 43067)	43067-001	4
RESERVOIR (Ref # 43078)	43078-1080	1
BOLT,OIL,L=23 (Ref # 92002)	92002-1907	2
WASHER,CIRCRIP (Ref # 92022)	92022-1601	1
RING-SNAP,20.5MM (Ref # 92033)	92033-1186	1
CLAMP (Ref # 92037)	92037-1710	2
PIN,8MM (Ref # 92043)	92043-1303	1
RING-O,MASTER CYLINDER (Ref # 92055)	92055-1251	1
BOLT,6X16 (Ref # 92150)	92150-1198	1
BOLT,SOCKET,8X30 (Ref # 92150A)	92150-1843	2

© 2026 Kawasaki Motors Corp., U.S.A.