1999 Ninja® 500R

PARTS DIAGRAM

Fenders

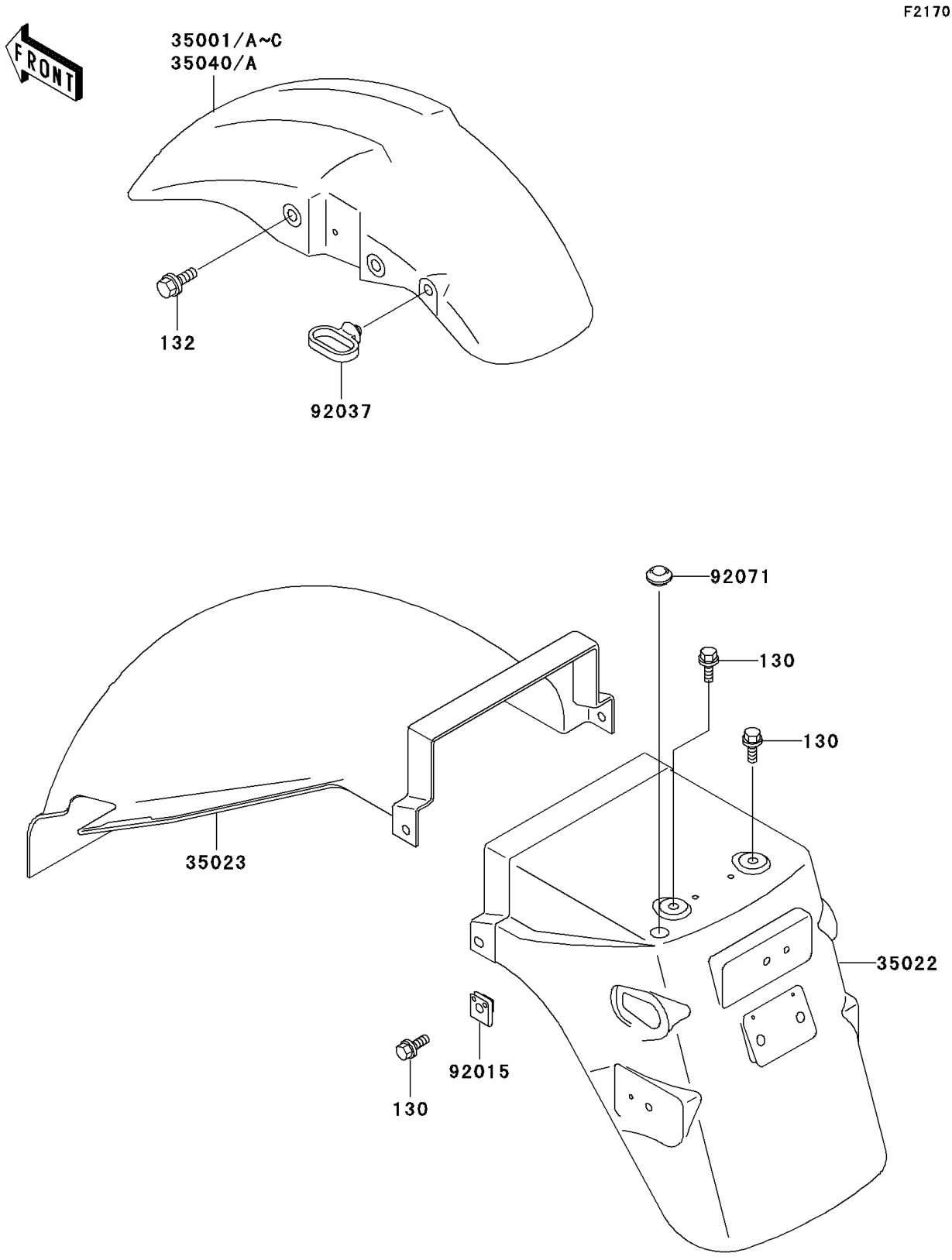

© 2026 Kawasaki Motors Corp., U.S.A.

1999 Ninja® 500R

PARTS LIST

Fenders

ITEM NAME	PART NUMBER	QUANTITY

© 2026 Kawasaki Motors Corp., U.S.A.