1999 Ninja® 500R

PARTS DIAGRAM

Electro Bracket

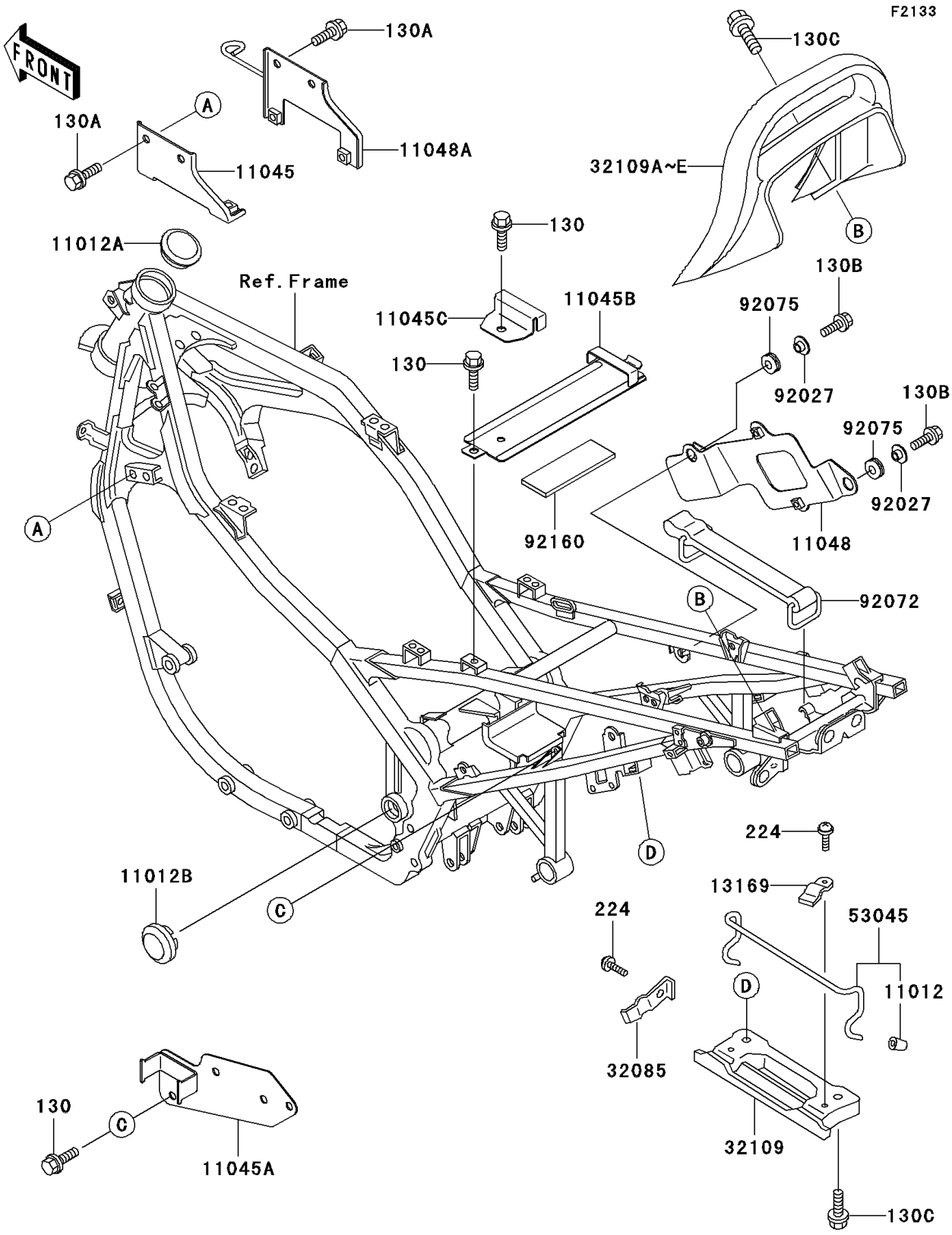

© 2026 Kawasaki Motors Corp., U.S.A.

1999 Ninja® 500R

PARTS LIST

Electro Bracket

ITEM NAME	PART NUMBER	QUANTITY
BOLT-FLANGED,6X8 (Ref # 130)	130J0608	4
BOLT-FLANGED,6X14,BLACK (Ref # 130A)	130J0614	4
BOLT-FLANGED,6X16,BLACK (Ref # 130B)	130J0616	2
BOLT-FLANGED,8X16,BLACK (Ref # 130C)	130J0816	6
SCREW-PAN-WP-CROS (Ref # 224)	224C0508	6
CAP,BUNGEE CORD HOOK (Ref # 11012)	11012-1589	4
CAP,SWING ARM (Ref # 11012A)	11012-1688	1
CAP,CROSS PIPE,BLACK (Ref # 11012B)	11012-1717-10	2
BRACKET,IGNITION COIL,LH (Ref # 11045)	11045-1419	1
BRACKET,REGULATOR (Ref # 11045A)	11045-1421	1
BRACKET,BATTERY BAND (Ref # 11045B)	11045-1423	1
BRACKET,JUNCTION BOX (Ref # 11045C)	11045-1424	1
BRACKET,IGNITER (Ref # 11048)	11048-1343	1
BRACKET,IGNITION COIL,RH (Ref # 11048A)	11048-1665	1
PLATE,GRIP (Ref # 13169)	13169-1760	4
STOPPER,HOOK (Ref # 32085)	32085-1187	2
GRIP-FRAME (Ref # 32109)	32109-1108	2
GRIP-FRAME,TAIL,F.RED (Ref # 32109A)	32109-1245-B1	1
HOOK-ASSY,BUNGEE CORD (Ref # 53045)	53045-1062	2
COLLAR (Ref # 92027)	92027-1166	2
BAND (Ref # 92072)	92072-1085	1
DAMPER (Ref # 92075)	92075-051	2
DAMPER,BATTERY (Ref # 92160)	92160-1094	1

© 2026 Kawasaki Motors Corp., U.S.A.