2002 Ninja® 500R

PARTS DIAGRAM

Oil Pump/Oil Filter

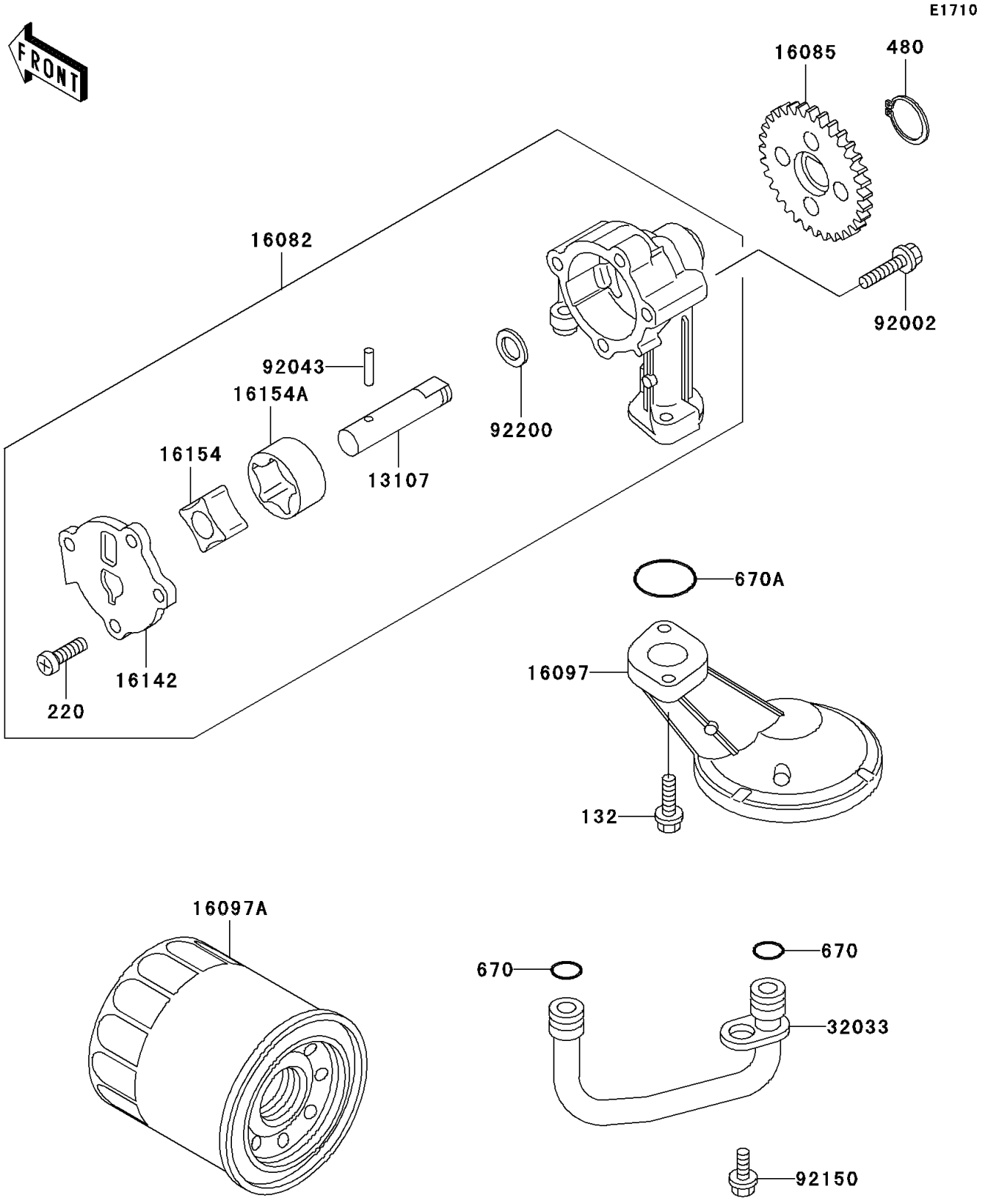

© 2026 Kawasaki Motors Corp., U.S.A.

2002 Ninja® 500R

PARTS LIST

Oil Pump/Oil Filter

ITEM NAME	PART NUMBER	QUANTITY
BOLT-FLANGED-SMALL (Ref # 132)	132G0620	2
SCREW-PAN-CROS,6X16 (Ref # 220)	220B0616	4
CIRCLIP-TYPE-C,11MM (Ref # 480)	480J1100	1
O RING,10MM (Ref # 670)	670B2010	2
O RING,22MM (Ref # 670A)	670D2022	1
SHAFT,OIL PUMP (Ref # 13107)	13107-1366	1
PUMP-ASSY-OIL (Ref # 16082)	16082-1147	1
GEAR,OIL PUMP (Ref # 16085)	16085-1143	1
FILTER-ASSY-OIL (Ref # 16097)	16097-1056	1
FILTER-ASSY-OIL (Ref # 16097A)	16097-1066	1
COVER-PUMP,OIL (Ref # 16142)	16142-1141	1
ROTOR-PUMP,INNER (Ref # 16154)	16154-1111	1
ROTOR-PUMP,OUTER (Ref # 16154A)	16154-1112	1
PIPE (Ref # 32033)	32033-1540	1
BOLT,6X25 (Ref # 92002)	92002-1609	3
PIN (Ref # 92043)	92043-1543	1
BOLT,6X12 (Ref # 92150)	92150-1826	1
WASHER (Ref # 92200)	92200-1334	1

© 2026 Kawasaki Motors Corp., U.S.A.