# 2006 Ninja® 250R

## PARTS DIAGRAM

### Tires

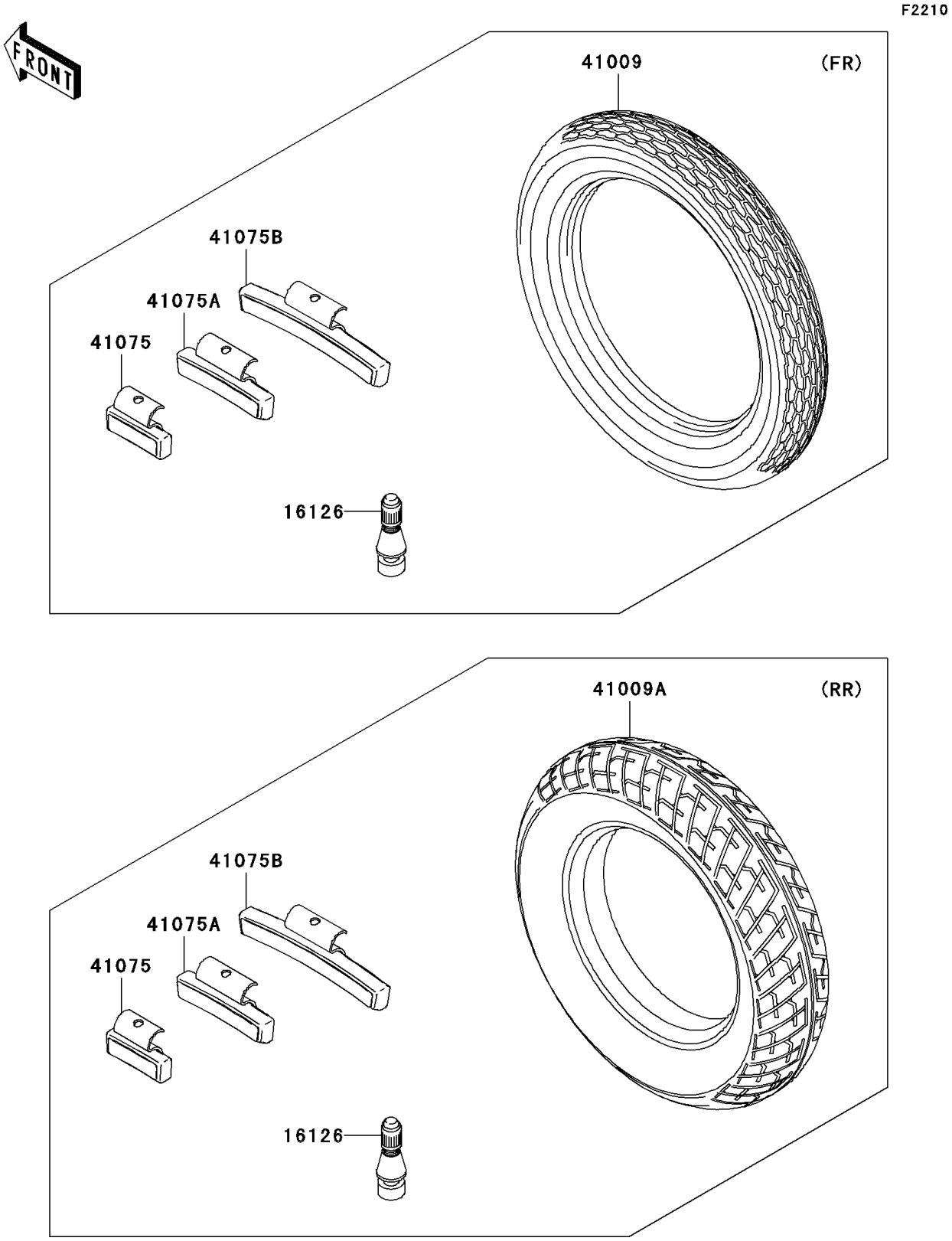


© 2026 Kawasaki Motors Corp., U.S.A.

# 2006 Ninja® 250R

## PARTS LIST

### Tires

| ITEM NAME | PART NUMBER | QUANTITY |
|---|---|---|
| VALVE,TIRE (Ref # 16126) | 16126-1140 | 2 |
| TIRE,FR,100/80-16 50S,K630F(D) (Ref # 41009) | 41009-1316 | 1 |
| TIRE,RR,130/80-16 64S,K630(D) (Ref # 41009A) | 41009-1317 | 1 |
| BALANCER-WHEEL,10G,SILVER (Ref # 41075) | 41075-0014 | AR |
| BALANCER-WHEEL,20G,SILVER (Ref # 41075A) | 41075-0015 | AR |
| BALANCER-WHEEL,30G,SILVER (Ref # 41075B) | 41075-0016 | AR |

© 2026 Kawasaki Motors Corp., U.S.A.