# 1993 Ninja® 250R

## PARTS DIAGRAM

Taillight(s)

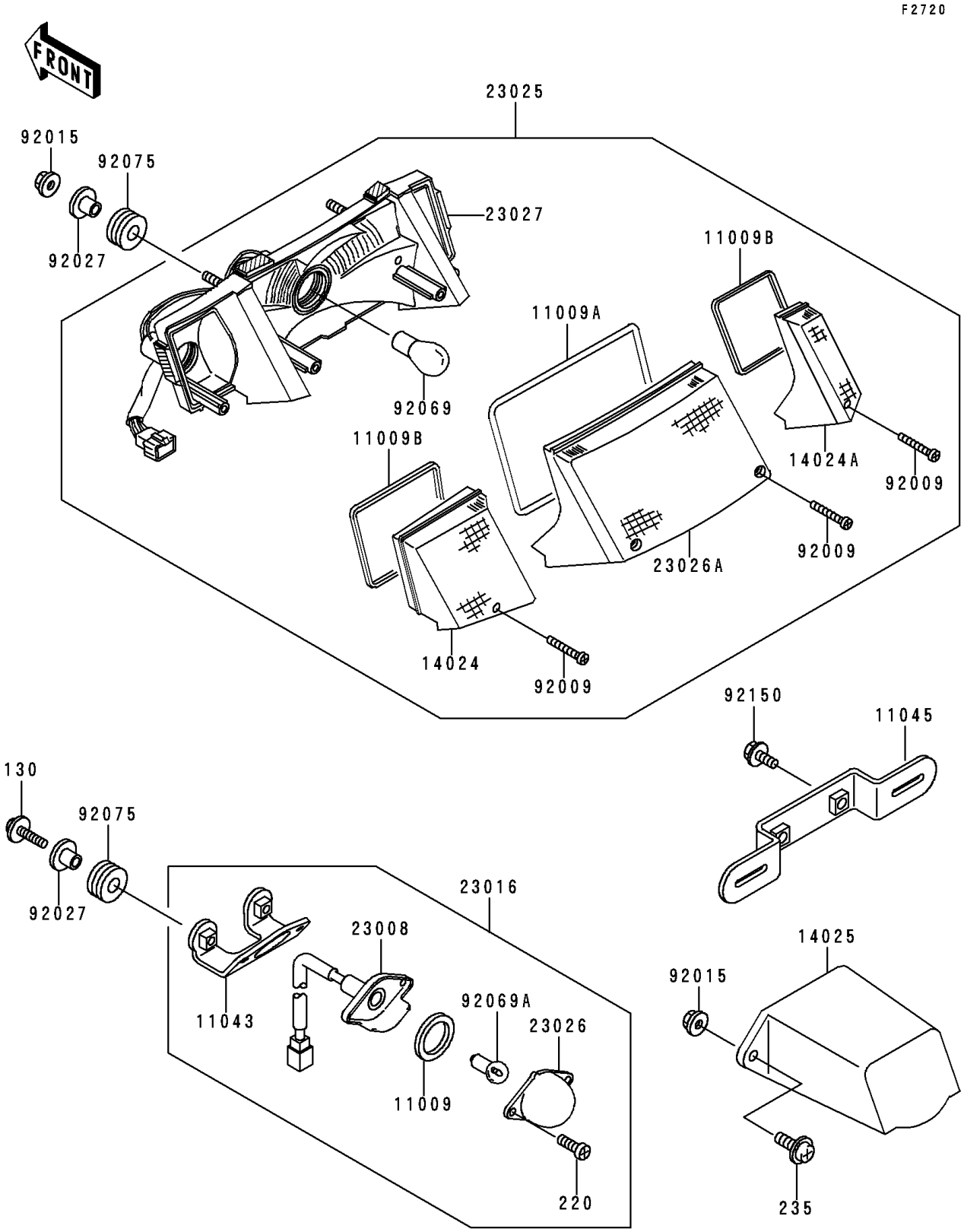


© 2026 Kawasaki Motors Corp., U.S.A.

# 1993 Ninja® 250R

## PARTS LIST

Taillight(s)

| ITEM NAME | PART NUMBER | QUANTITY |
|---|---|---|
| BOLT-FLANGED,6X25 (Ref # 130) | 130H0625 | 2 |
| SCREW-PAN-CROS (Ref # 220) | 220B0410 | 2 |
| SCREW-PAN-WP-CROS (Ref # 235) | 235C0620 | 2 |
| GASKET,LICENSE PLATE LAMP (Ref # 11009) | 11009-1372 | 1 |
| GASKET,TAIL LAMP LENS (Ref # 11009A) | 11009-1663 | 1 |
| GASKET,SIGNAL LAMP LENS (Ref # 11009B) | 11009-1664 | 2 |
| BRACKET,LICENSE PLATE LAMP (Ref # 11043) | 11043-1497 | 1 |
| BRACKET,LICENSE (Ref # 11045) | 11045-1387 | 1 |
| COVER,TAIL LAMP,LH (Ref # 14024) | 14024-1662 | 1 |
| COVER,TAIL LAMP,RH (Ref # 14024A) | 14024-1663 | 1 |
| COVER,LICENSE PLATE LAMP (Ref # 14025) | 14025-1821 | 1 |
| SOCKET-ASSY,LICENSE PLATE LAMP (Ref # 23008) | 23008-1221 | 1 |
| LAMP-ASSY,LICENSE PLATE (Ref # 23016) | 23016-1053 | 1 |
| LAMP-TAIL (Ref # 23025) | 23025-1177 | 1 |
| LENS,LAMP (Ref # 23026) | 23026-1054 | 1 |
| LENS,TAIL LAMP (Ref # 23026A) | 23026-1101 | 1 |
| BODY-COMP-TAIL LAMP (Ref # 23027) | 23027-1088 | 1 |
| SCREW,TAPPING,4X16 (Ref # 92009) | 92009-1063 | 4 |
| NUT,FLANGED,6MM (Ref # 92015) | 92015-1367 | 4 |
| COLLAR,L=13.1 (Ref # 92027) | 92027-251 | 4 |
| BULB,12V 27/8W (Ref # 92069) | 92069-059 | 1 |
| BULB,12V 8W (Ref # 92069A) | 92069-1012 | 1 |
| DAMPER (Ref # 92075) | 92075-1690 | 4 |
| BOLT,6X14 (Ref # 92150) | 92150-1133 | 2 |

© 2026 Kawasaki Motors Corp., U.S.A.