1994 Ninja® 250R

PARTS DIAGRAM

Meter(s)

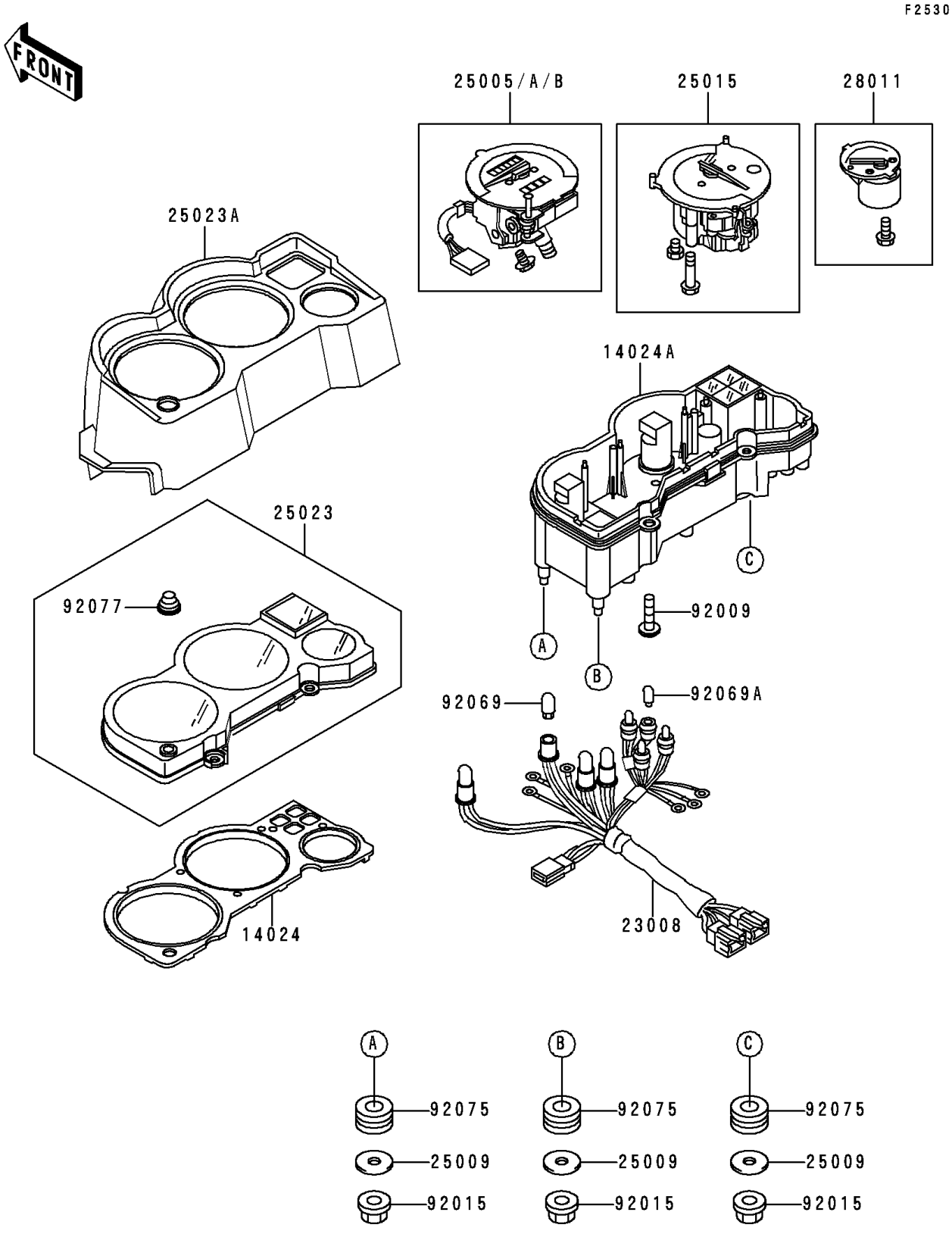

© 2026 Kawasaki Motors Corp., U.S.A.

1994 Ninja® 250R

PARTS LIST

Meter(s)

ITEM NAME	PART NUMBER	QUANTITY

© 2026 Kawasaki Motors Corp., U.S.A.