1994 Ninja® 250R

PARTS DIAGRAM

Electro Bracket

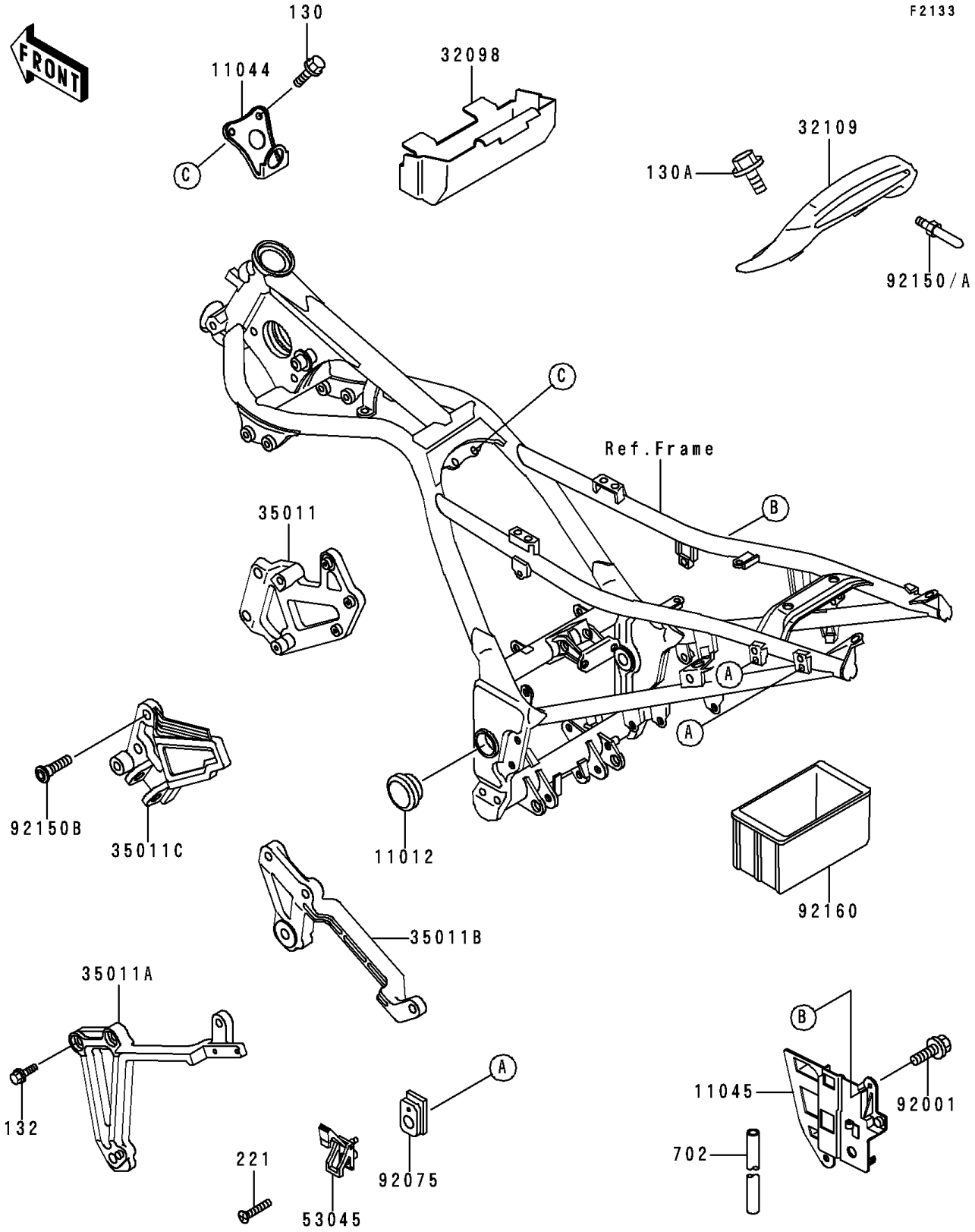

© 2026 Kawasaki Motors Corp., U.S.A.

1994 Ninja® 250R

PARTS LIST

Electro Bracket

ITEM NAME	PART NUMBER	QUANTITY
BOLT-FLANGED,6X10 (Ref # 130)	130B0610	2
BOLT-FLANGED,8X20 (Ref # 130A)	130B0820	2
BOLT-FLANGED-SMALL (Ref # 132)	132G0820	6
SCREW-CSK-CROS (Ref # 221)	221E0625	4
TUBE-RUBBER,5X8X500 (Ref # 702)	702A05500	1
CAP,SWING ARM BRACKET (Ref # 11012)	11012-1459	2
BRACKET,AIR FILTER (Ref # 11044)	11044-1828	1
BRACKET,ELECTRIC (Ref # 11045)	11045-1578	1
CASE-TOOL (Ref # 32098)	32098-1076	1
GRIP-FRAME,RR,EBONY (Ref # 32109)	32109-1163-H8	1
STAY,FR,RH (Ref # 35011)	35011-1355	1
STAY,MUFFLER,LH (Ref # 35011A)	35011-1356	1
STAY,MUFFLER,RH (Ref # 35011B)	35011-1357	1
STAY,FR,LH (Ref # 35011C)	35011-1380	1
HOOK-ASSY,ROPE (Ref # 53045)	53045-1051	4
BOLT,6X14,BLACK (Ref # 92001)	92001-1847	2
DAMPER,ROPE HOOK (Ref # 92075)	92075-1726	4
BOLT (Ref # 92150A)	92150-1002	2
BOLT,SOCKET,8X20 (Ref # 92150B)	92150-1839	5

© 2026 Kawasaki Motors Corp., U.S.A.