2003 Ninja® 250R

PARTS DIAGRAM

Decals(Blue)(F17)

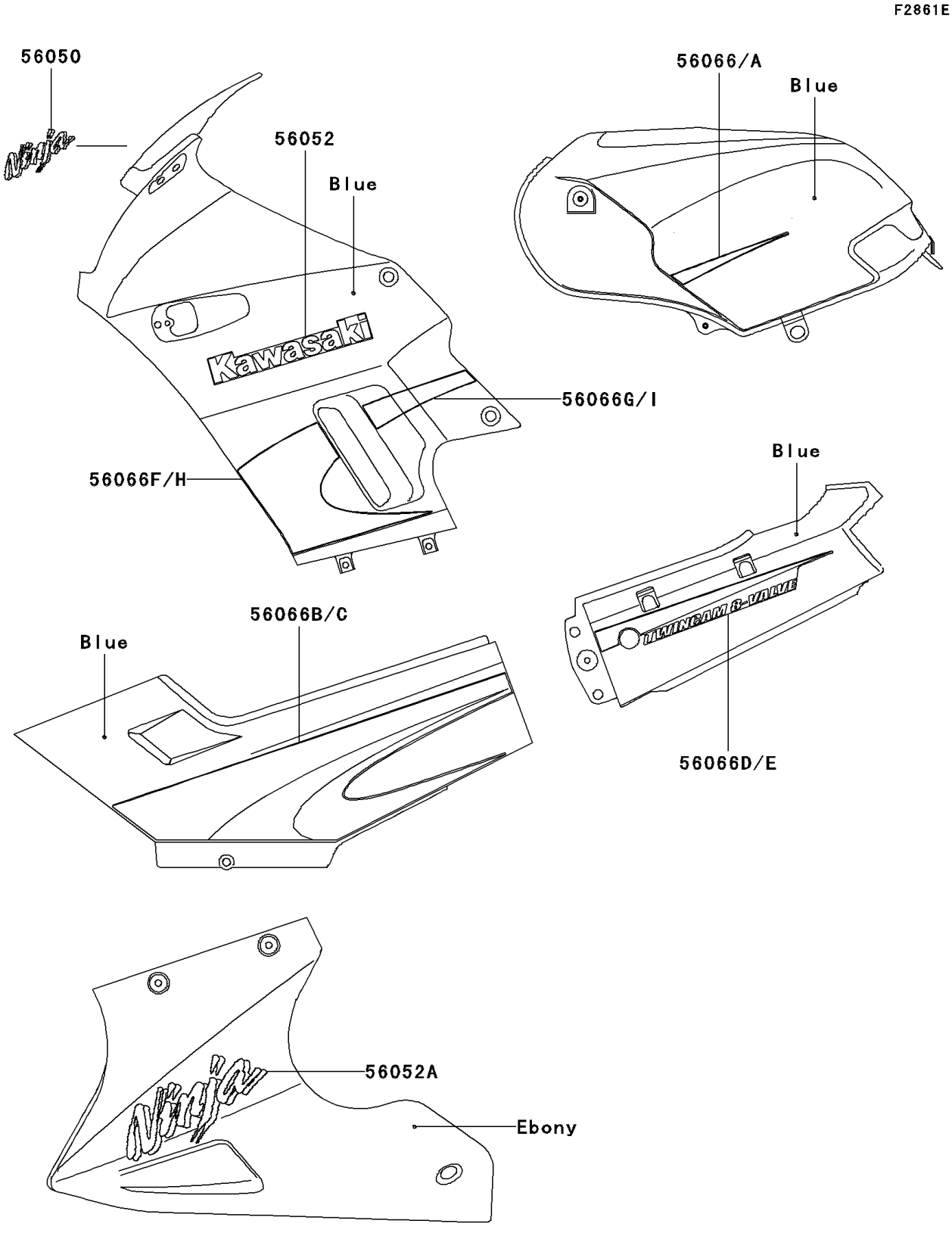

© 2026 Kawasaki Motors Corp., U.S.A.

2003 Ninja® 250R

PARTS LIST

Decals(Blue)(F17)

ITEM NAME	PART NUMBER	QUANTITY
MARK,WINDSHIELD (Ref # 56050)	56050-1054	1
MARK,UPP COWLING,KAWASAKI (Ref # 56052)	56052-1773	2
MARK,LWR COWLING,NINJA (Ref # 56052A)	56052-1774	2
PATTERN,FUEL TANK,LH (Ref # 56066)	56066-1175	1
PATTERN,FUEL TANK,RH (Ref # 56066A)	56066-1176	1
PATTERN,SIDE COVER,LH (Ref # 56066B)	56066-1177	1
PATTERN,SIDE COVER,RH (Ref # 56066C)	56066-1178	1
PATTERN,SEAT COVER,LH (Ref # 56066D)	56066-1179	1
PATTERN,SEAT COVER,RH (Ref # 56066E)	56066-1180	1
PATTERN,UPP COWLING,FR,LH (Ref # 56066F)	56066-1181	1
PATTERN,UPP COWLING,RR,LH (Ref # 56066G)	56066-1182	1
PATTERN,UPP COWLING,FR,RH (Ref # 56066H)	56066-1183	1
PATTERN,UPP COWLING,RR,RH (Ref # 56066I)	56066-1184	1

© 2026 Kawasaki Motors Corp., U.S.A.