2003 Ninja® 250R

PARTS DIAGRAM

Stand(s)

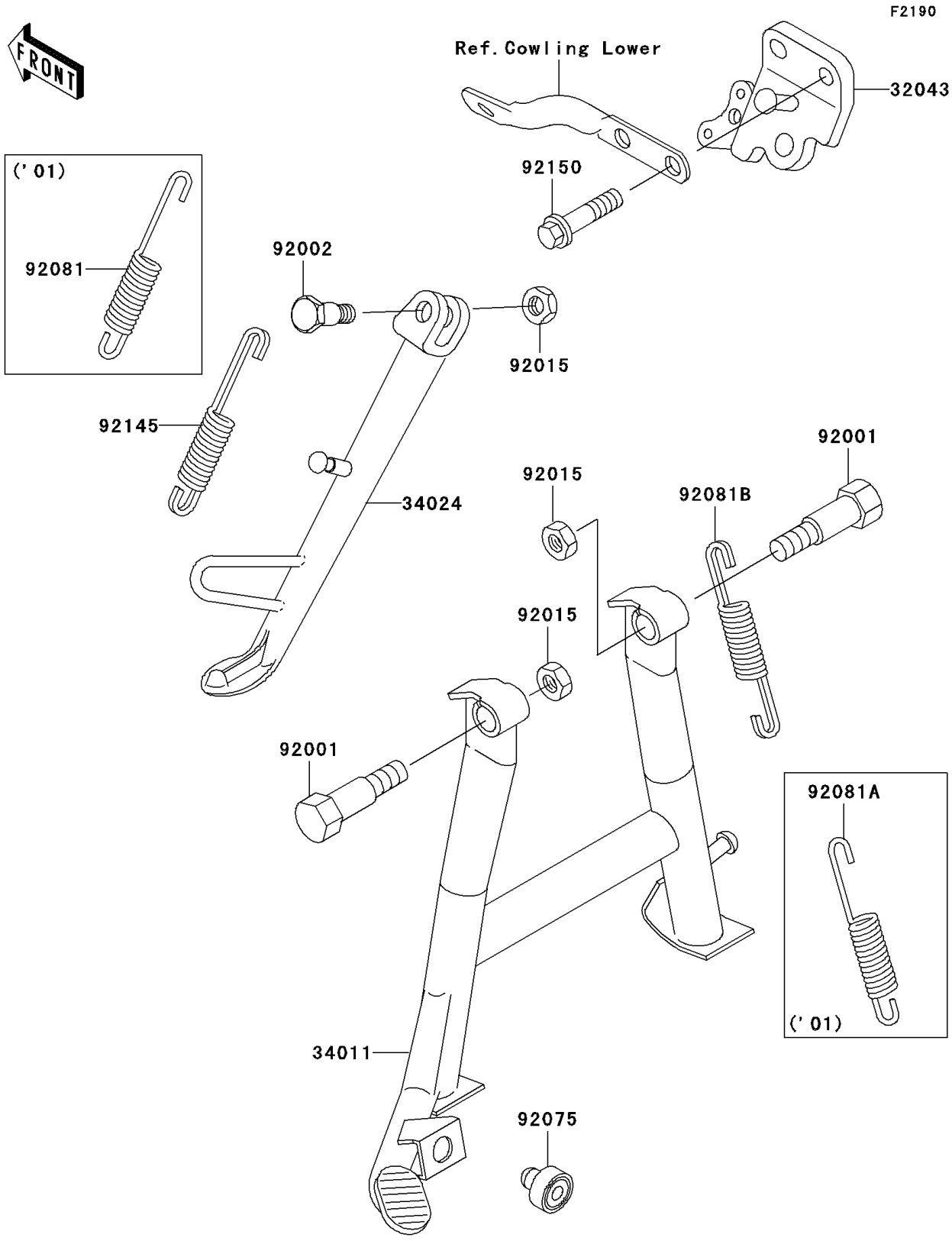

© 2026 Kawasaki Motors Corp., U.S.A.

2003 Ninja® 250R

PARTS LIST

Stand(s)

ITEM NAME	PART NUMBER	QUANTITY
BRACKET-STAND,SIDE (Ref # 32043)	32043-1317	1
STAND-CENTER (Ref # 34011)	34011-1196	1
STAND-SIDE (Ref # 34024)	34024-1230	1
BOLT,CENTER STAND (Ref # 92001)	92001-1214	2
BOLT,SIDE STAND (Ref # 92002)	92002-1813	1
NUT,LOCK,10MM,BLACK (Ref # 92015)	92015-1188	3
DAMPER (Ref # 92075)	92075-015	1
SPRING,CENTER STAND (Ref # 92081B)	92081-1835	1
SPRING,SIDE STAND (Ref # 92145)	92145-0084	1
BOLT,FLANGED,10X25 (Ref # 92150)	92150-1065	2

© 2026 Kawasaki Motors Corp., U.S.A.