2003 Ninja® 250R

PARTS DIAGRAM

Swingarm

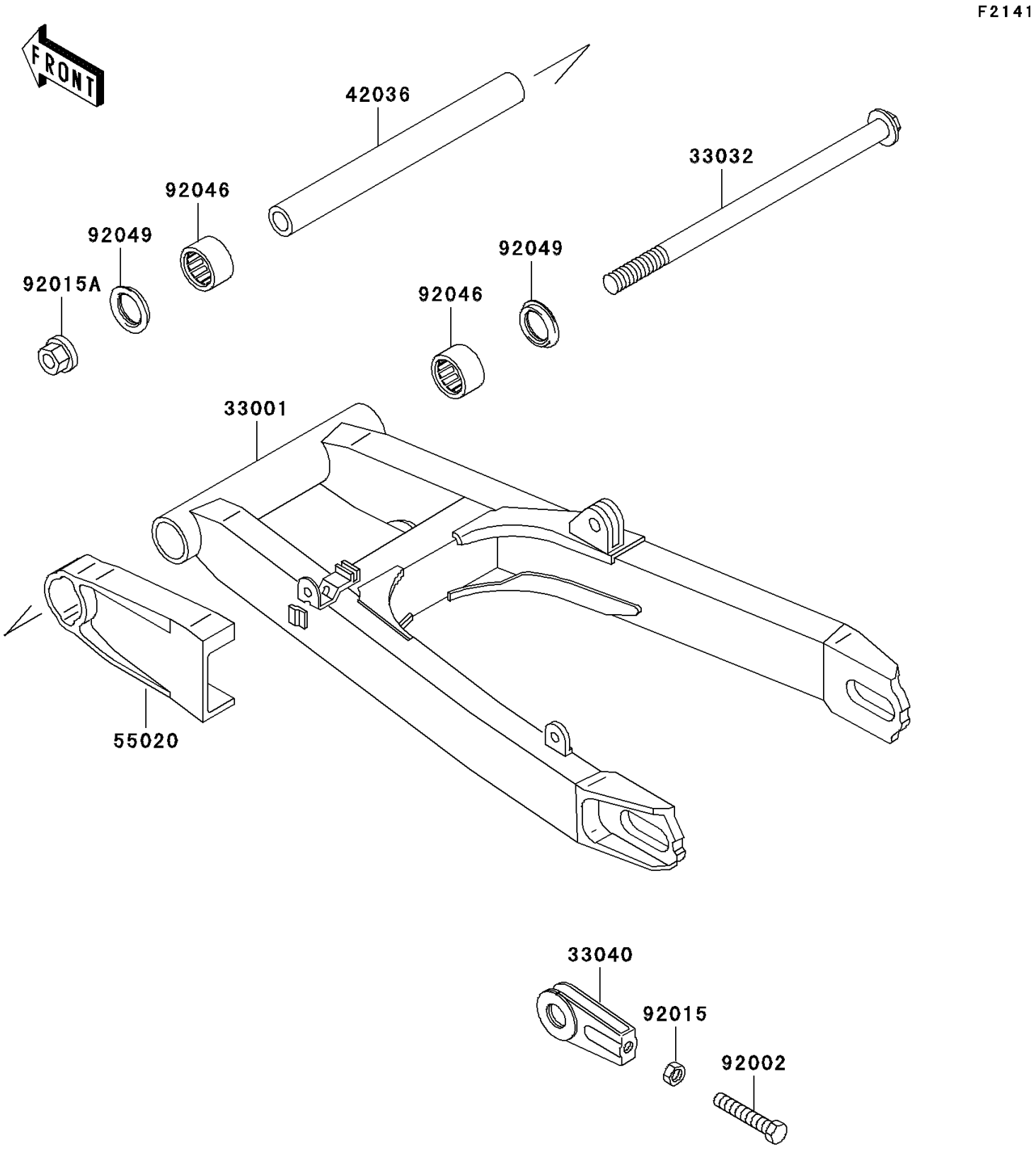

© 2026 Kawasaki Motors Corp., U.S.A.

2003 Ninja® 250R

PARTS LIST

Swingarm

ITEM NAME	PART NUMBER	QUANTITY
ARM-COMP-SWING,SILVER NO.25 (Ref # 33001)	33001-1301-CE	1
SHAFT-SWING ARM (Ref # 33032)	33032-1134	1
ADJUSTER-CHAIN (Ref # 33040)	33040-043	2
SLEEVE,16.1X22X213 (Ref # 42036)	42036-1218	1
GUARD,CHAIN (Ref # 55020)	55020-1218	1
BOLT,8X55 (Ref # 92002)	92002-1825	2
NUT,8MM (Ref # 92015)	92015-1364	2
NUT,FLANGED,16MM (Ref # 92015A)	92015-1946	1
BEARING-NEEDLE,TA2230Z (Ref # 92046)	92046-1174	2
SEAL-OIL,MHA22X29X5.7F (Ref # 92049)	92049-1289	2

© 2026 Kawasaki Motors Corp., U.S.A.