2003 Ninja® 250R

PARTS DIAGRAM

Clutch

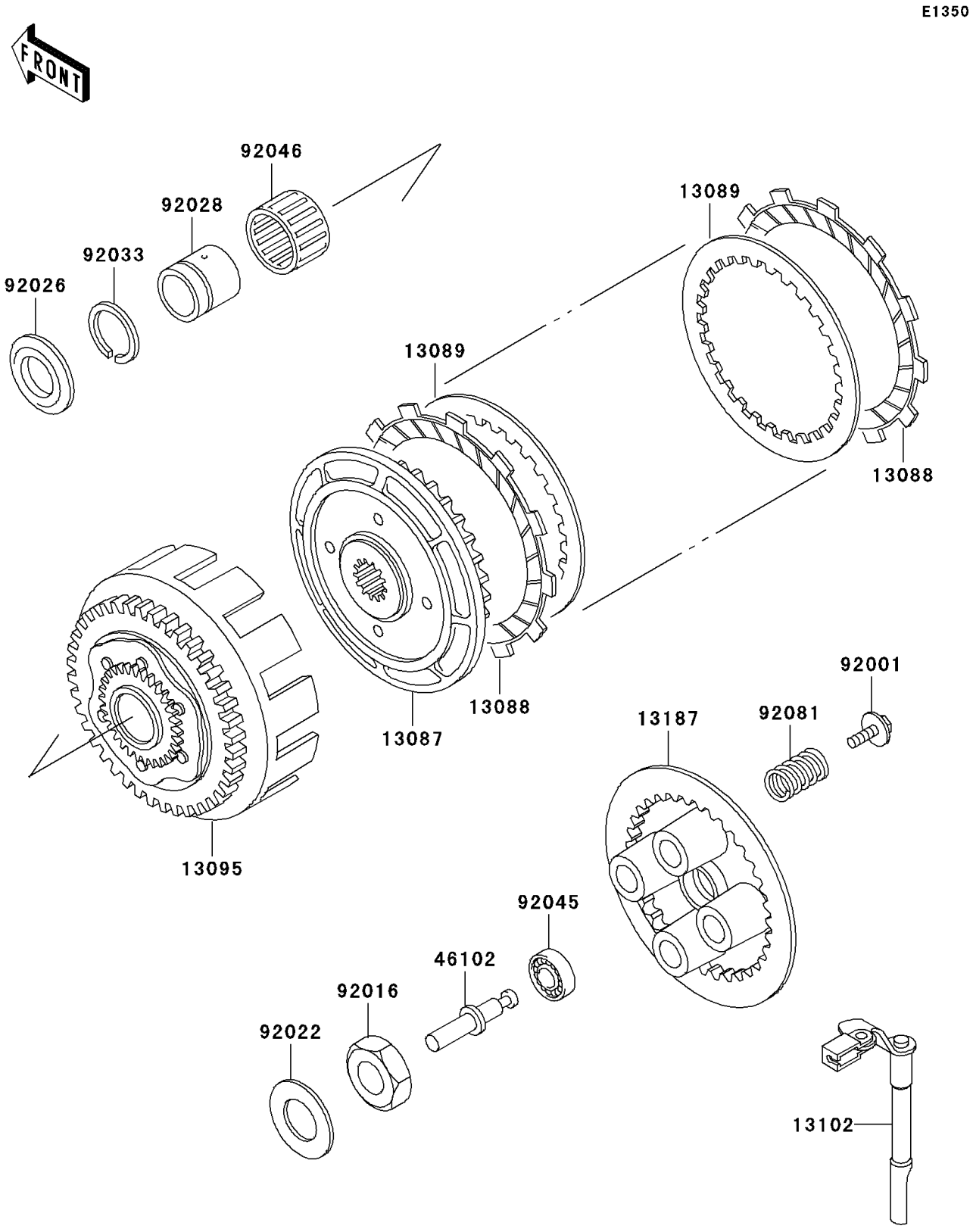

© 2026 Kawasaki Motors Corp., U.S.A.

2003 Ninja® 250R

PARTS LIST

Clutch

ITEM NAME	PART NUMBER	QUANTITY
HUB-CLUTCH (Ref # 13087)	13087-1076	1
PLATE-FRICTION (Ref # 13088)	13088-1013	5
PLATE-CLUTCH,T=2.0 (Ref # 13089)	13089-026	4
HOUSING-COMP-CLUTCH (Ref # 13095)	13095-1145	1
RELEASE-COMP-CLUTCH (Ref # 13102)	13102-1079	1
PLATE-CLUTCH OPERATING (Ref # 13187)	13187-1057	1
ROD,CLUTCH (Ref # 46102)	46102-1030	1
BOLT,FLANGED,6X18 (Ref # 92001)	92001-1066	4
NUT,20MM (Ref # 92016)	92016-028	1
WASHER,20.3X36X2.3 (Ref # 92022)	92022-1116	1
SPACER,THRUST,T=5.5 (Ref # 92026)	92026-116	1
BUSHING,CLUTCH (Ref # 92028)	92028-1414	1
RING-SNAP (Ref # 92033)	92033-1212	1
BEARING-BALL (Ref # 92045)	92045-1408	1
BEARING-NEEDLE,KTV323723 (Ref # 92046)	92046-028	1
SPRING,CLUTCH (Ref # 92081)	92081-139	4

© 2026 Kawasaki Motors Corp., U.S.A.