2003 Ninja® 250R

PARTS DIAGRAM

Air Cleaner

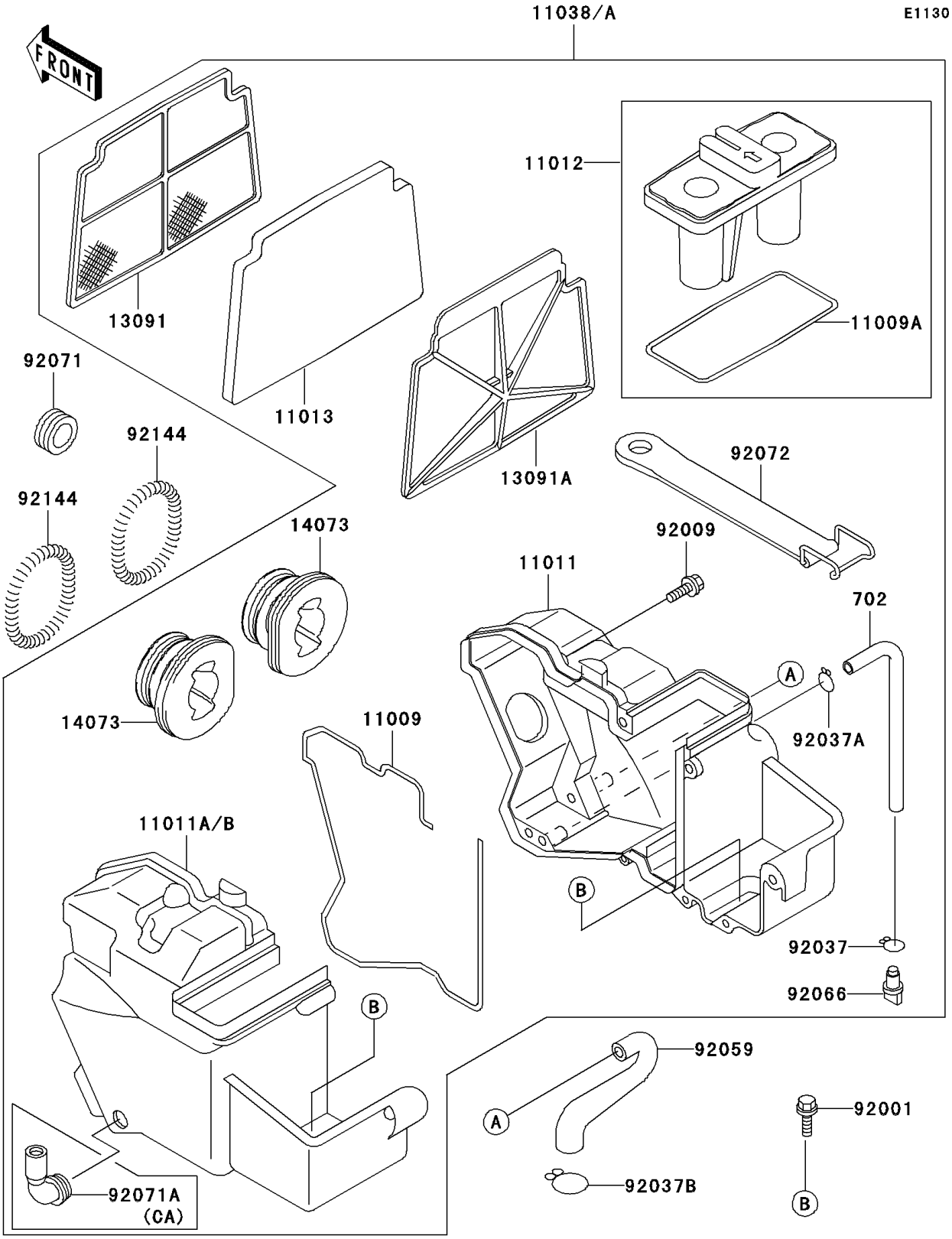

© 2026 Kawasaki Motors Corp., U.S.A.

2003 Ninja® 250R

PARTS LIST

Air Cleaner

ITEM NAME	PART NUMBER	QUANTITY
TUBE-RUBBER,7X10X200 (Ref # 702)	702A07200	1
GASKET,AIR FILTER (Ref # 11009)	11009-1599	1
GASKET,AIR FILTER CAP (Ref # 11009A)	11009-1613	1
CASE-AIR FILTER,RH (Ref # 11011)	11011-1219	1
CAP,INTAKE (Ref # 11012)	11012-1504	1
ELEMENT-AIR FILTER (Ref # 11013)	11013-1141	1
HOLDER,AIR FILTER,FR (Ref # 13091)	13091-1421	1
HOLDER,AIR FILTER,RR (Ref # 13091A)	13091-1422	1
DUCT,AIR FILTER (Ref # 14073)	14073-1307	2
BOLT,6X20 (Ref # 92001)	92001-1773	2
SCREW,TAPPING,5X25 (Ref # 92009)	92009-1339	10
CLAMP (Ref # 92037)	92037-1712	1
CLAMP,TUBE (Ref # 92037A)	92037-1972	1
CLAMP,TUBE (Ref # 92037B)	92037-213	1
TUBE,BREAHER (Ref # 92059)	92059-1676	1
PLUG,DRAIN (Ref # 92066)	92066-1211	1
GROMMET,RESERVOIR (Ref # 92071)	92071-1047	1
BAND,AIR FILTER (Ref # 92072)	92072-1196	1
SPRING,AIR FILTER DUCT (Ref # 92144)	92144-1771	2
CASE-AIR FILTER,LH (Ref # 11011A)	11011-1623	1
CASE-AIR FILTER,LH (Ref # 11011B)	11011-1635	1
CASE-ASSY-AIR FILTER (Ref # 11038)	11038-1067	1
CASE-ASSY-AIR FILTER (Ref # 11038A)	11038-1127	1
GROMMET,AIR FILTER (Ref # 92071A)	92071-1114	1

© 2026 Kawasaki Motors Corp., U.S.A.