2003 Ninja® 250R

PARTS DIAGRAM

Cylinder/Piston(s)

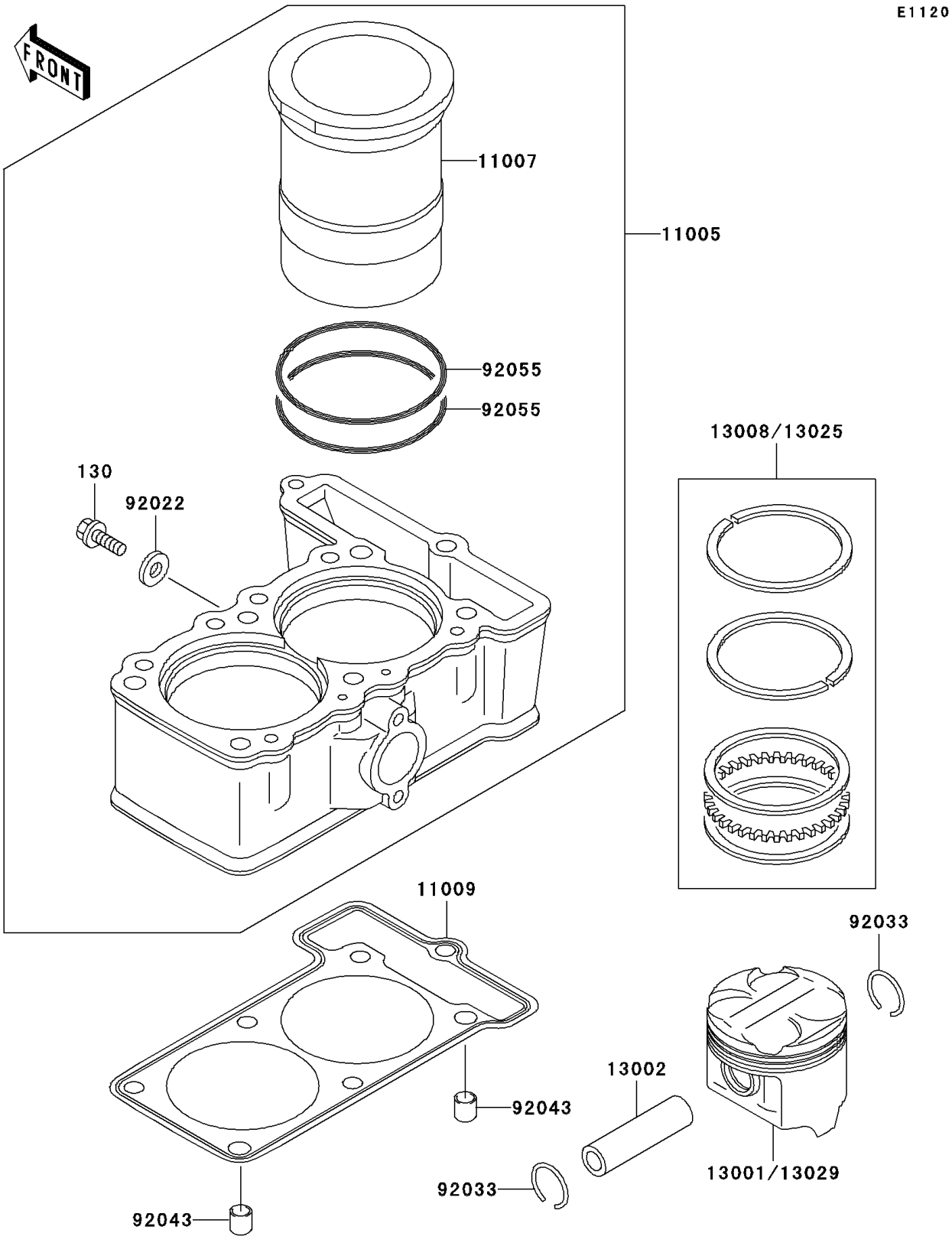

© 2026 Kawasaki Motors Corp., U.S.A.

2003 Ninja® 250R

PARTS LIST

Cylinder/Piston(s)

ITEM NAME	PART NUMBER	QUANTITY
BOLT-FLANGED,6X10,BLACK (Ref # 130)	130C0610	1
CYLINDER-ENGINE (Ref # 11005)	11005-1623	1
LINER-CYLINDER (Ref # 11007)	11007-1111	2
GASKET,CYLINDER BASE (Ref # 11009)	11009-1572	1
PISTON-ENGINE,STD (Ref # 13001)	13001-1325	2
PIN-PISTON (Ref # 13002)	13002-1097	2
RING-SET-PISTON,STD (Ref # 13008)	13008-1157	2
RING-SET-PISTON L,O/S,0.50 (Ref # 13025)	13025-1120	2
PISTON-ENGINE L,O/S 0.50 (Ref # 13029)	13029-1201	2
WASHER,6.2X11X1 (Ref # 92022)	92022-304	1
RING-SNAP,PISTON PIN (Ref # 92033)	92033-1161	4
PIN,8.2X10X14 (Ref # 92043)	92043-1264	2
RING-O,68.2X2.4 (Ref # 92055)	92055-1338	4

© 2026 Kawasaki Motors Corp., U.S.A.