2003 Ninja® 250R

PARTS DIAGRAM

Cylinder Head

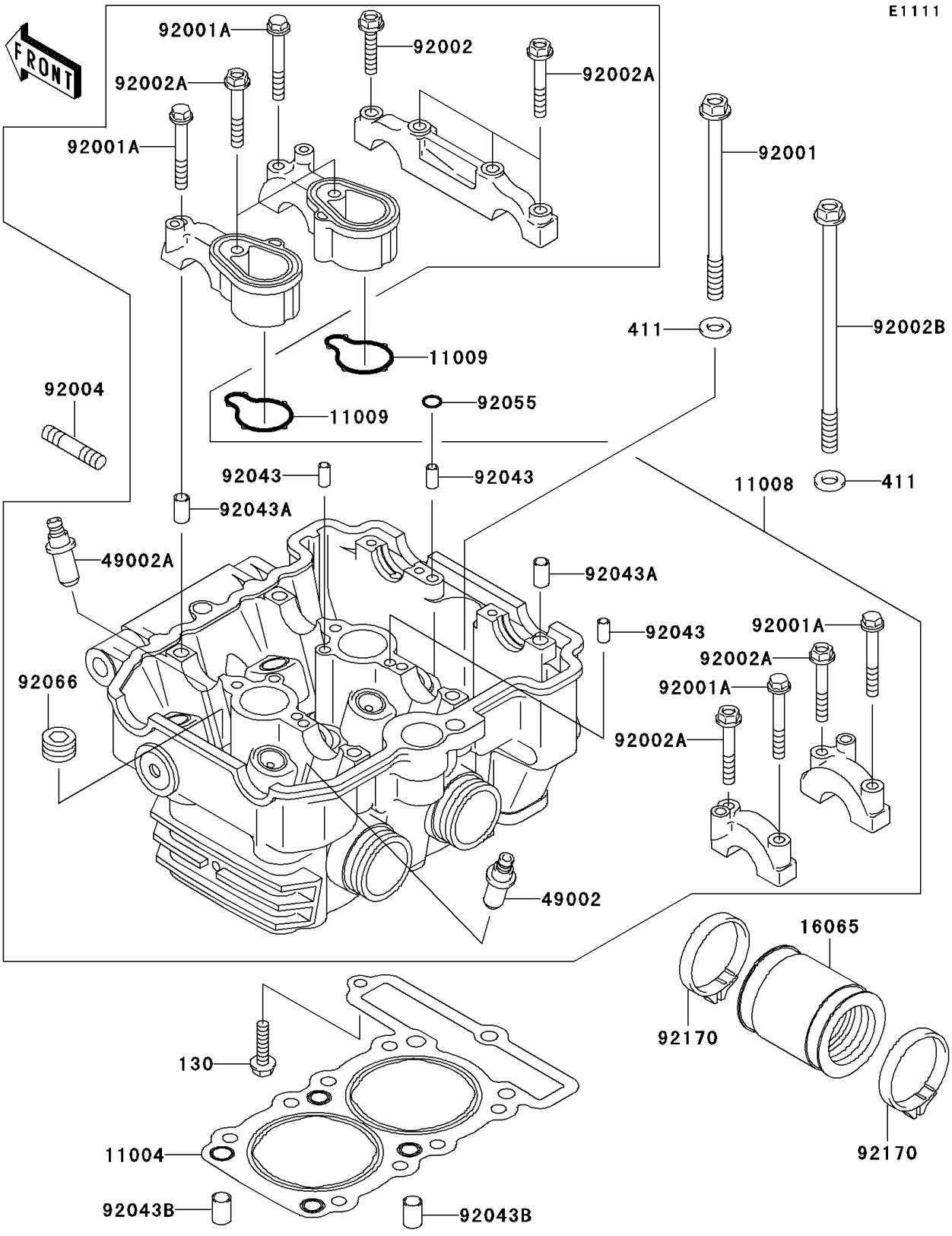

© 2026 Kawasaki Motors Corp., U.S.A.

2003 Ninja® 250R

PARTS LIST

Cylinder Head

ITEM NAME	PART NUMBER	QUANTITY
BOLT-FLANGED,6X25 (Ref # 130)	130J0625	1
WASHER-PLAIN,8MM (Ref # 411)	411B0800	7
GASKET-HEAD (Ref # 11004)	11004-1312	1
HEAD-COMP-CYLINDER (Ref # 11008)	11008-1201	1
GASKET,CAMSHAFT BRACKET (Ref # 11009)	11009-1573	2
HOLDER-CARBURETOR (Ref # 16065)	16065-1156	2
GUIDE-VALVE,INTAKE (Ref # 49002)	49002-1070	AR
GUIDE-VALVE,EXHAUST (Ref # 49002A)	49002-1071	AR
BOLT,8X115 (Ref # 92001)	92001-1481	1
BOLT,6X46 (Ref # 92001A)	92001-1872	4
BOLT,6X30 (Ref # 92002)	92002-1755	1
BOLT,6X40 (Ref # 92002A)	92002-1756	7
BOLT,8X146 (Ref # 92002B)	92002-1832	6
STUD,6X27 (Ref # 92004)	92004-066	4
PIN,4.2X6X12 (Ref # 92043)	92043-1262	5
PIN,6.2X8X14 (Ref # 92043A)	92043-1263	5
PIN,8.2X10X14 (Ref # 92043B)	92043-1264	2
RING-O,5.5X1.5 (Ref # 92055)	92055-1339	1
PLUG,PT1/2X12.5 (Ref # 92066)	92066-0002	3
CLAMP (Ref # 92170)	92170-1438	4

© 2026 Kawasaki Motors Corp., U.S.A.