2002 Vulcan 500 LTD

PARTS DIAGRAM

Seat

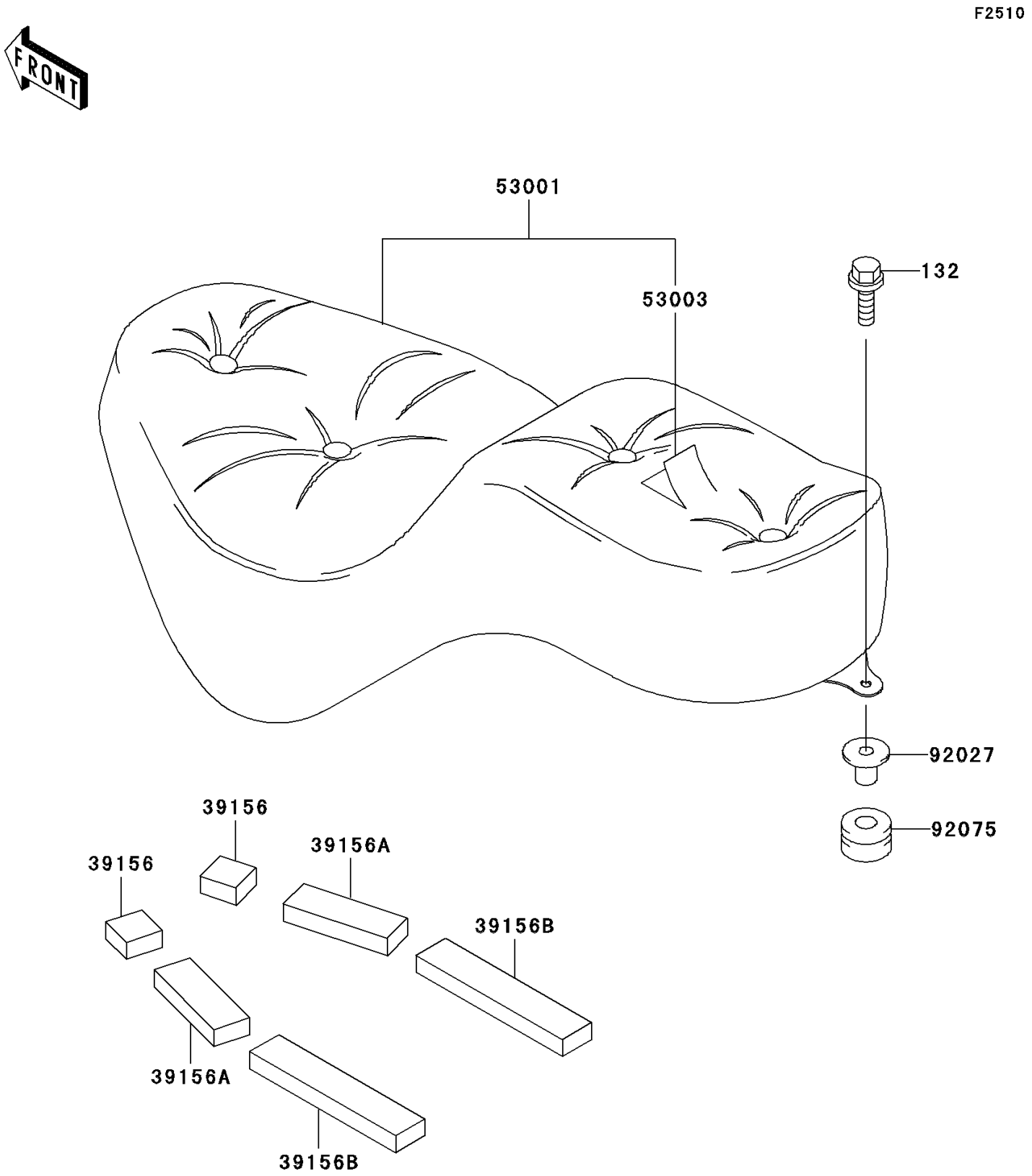

© 2026 Kawasaki Motors Corp., U.S.A.

2002 Vulcan 500 LTD

PARTS LIST

Seat

ITEM NAME	PART NUMBER	QUANTITY
BOLT-FLANGED-SMALL (Ref # 132)	132E0620	1
PAD,SEAT,FR (Ref # 39156)	39156-1562	2
PAD,SEAT,CNT (Ref # 39156A)	39156-1563	2
PAD,SEAT,RR (Ref # 39156B)	39156-1564	2
SEAT-ASSY,DUAL,W/BAND,BLACK (Ref # 53001)	53001-1801-MA	1
LEATHER,SEAT,BLACK (Ref # 53003)	53003-1358-MA	1
COLLAR (Ref # 92027)	92027-1166	1
DAMPER (Ref # 92075)	92075-105	1

© 2026 Kawasaki Motors Corp., U.S.A.