2002 Vulcan 500 LTD

PARTS DIAGRAM

Fenders

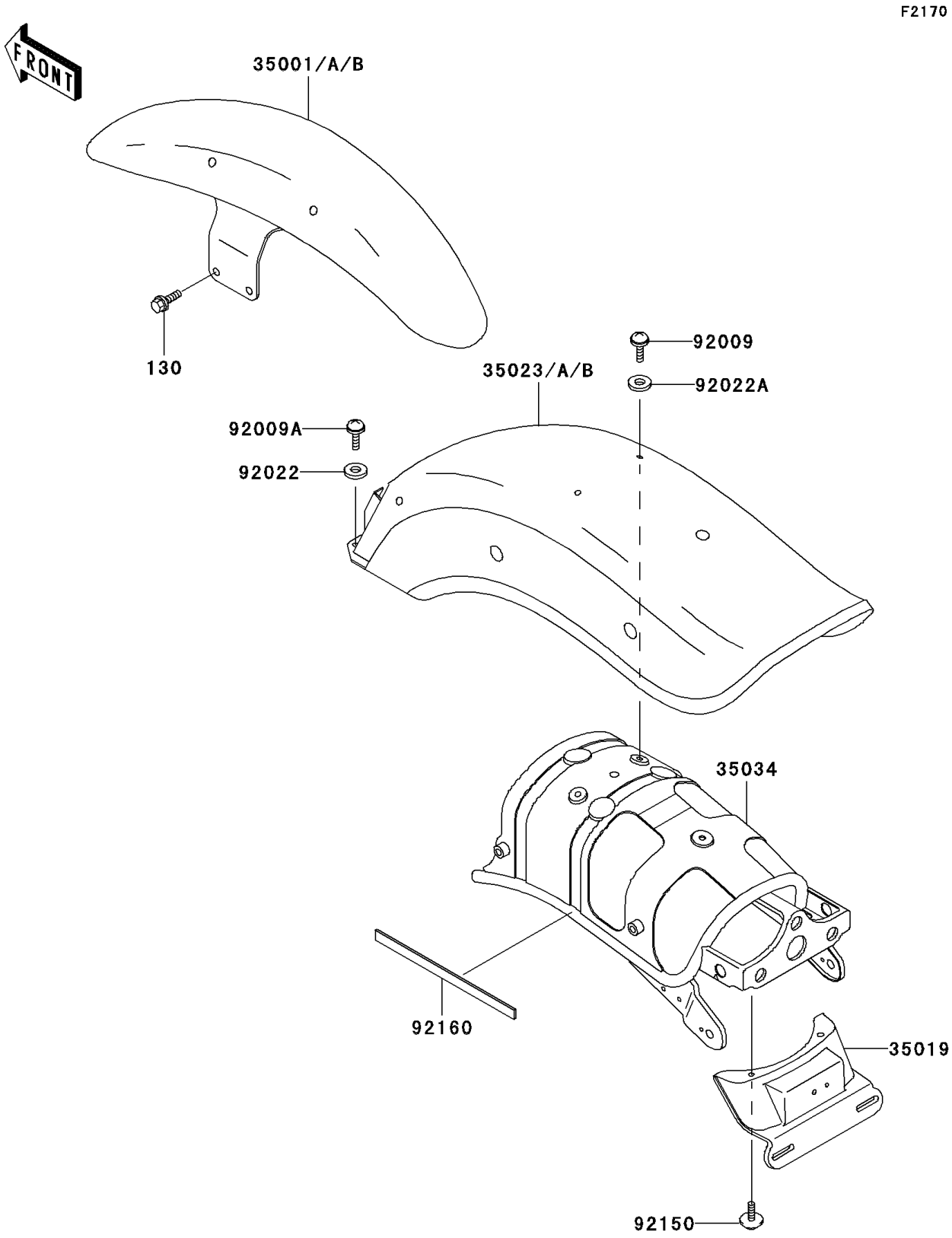

© 2026 Kawasaki Motors Corp., U.S.A.

2002 Vulcan 500 LTD

PARTS LIST

Fenders

ITEM NAME	PART NUMBER	QUANTITY
BOLT-FLANGED,8X20 (Ref # 130)	130H0820	4
FENDER-ASSY-FRONT,C.C.RED (Ref # 35001)	35001-1202-L1	1
FLAP,RR (Ref # 35019)	35019-1340	1
FENDER-REAR,C.C.RED (Ref # 35023)	35023-1438-L1	1
REINFORCE,REAR FENDER (Ref # 35034)	35034-1264	1
SCREW,5X12 (Ref # 92009)	92009-1652	2
SCREW,6X18 (Ref # 92009A)	92009-1663	2
WASHER,6.5X16X1 (Ref # 92022)	92022-1143	2
WASHER,NYLON,5.3X11.5X1.5 (Ref # 92022A)	92022-1521	2
BOLT,6X14 (Ref # 92150)	92150-1133	2
DAMPER (Ref # 92160)	92160-1632	2

© 2026 Kawasaki Motors Corp., U.S.A.